Beamline Layout

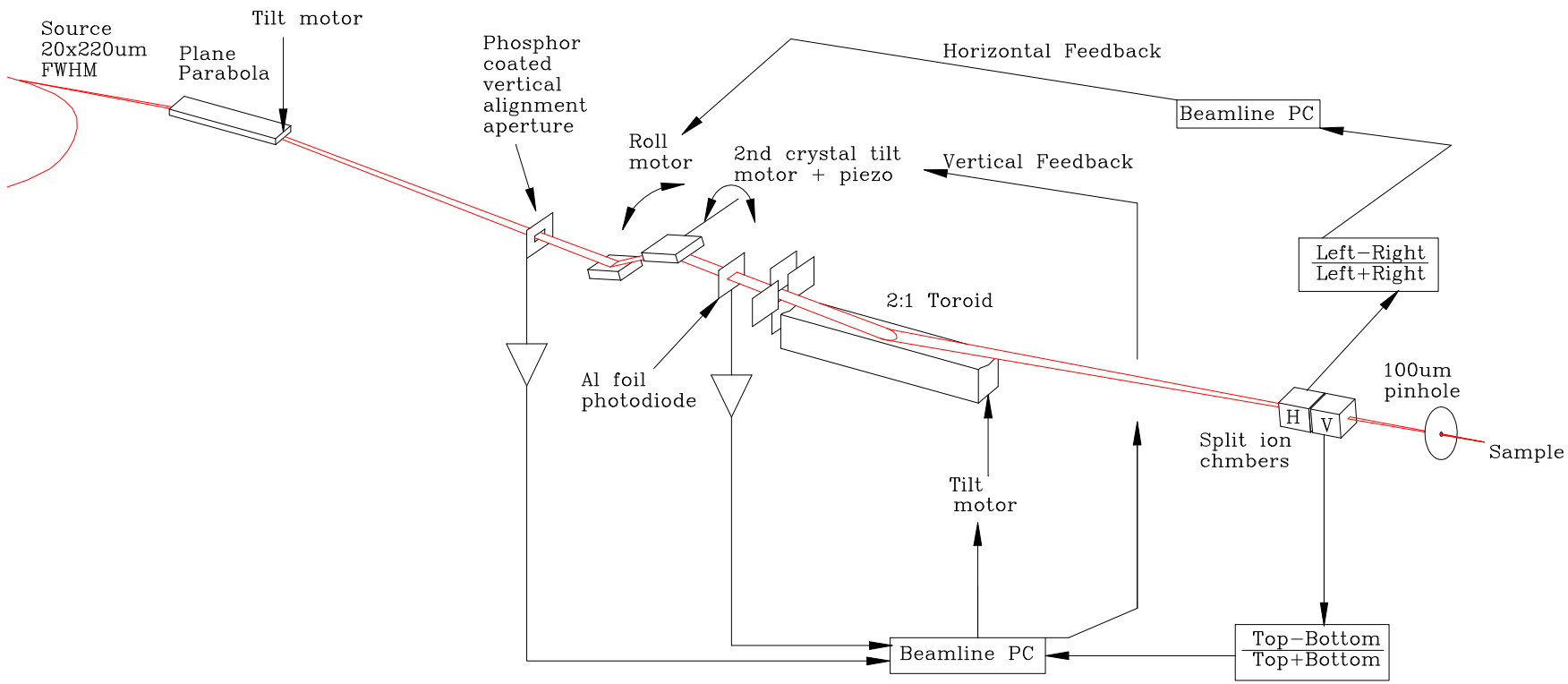

Beamline Components

- Plane Parabola Mirror M1
  - 1 Stepper Motor
- Phosphor Coated Aperture
  - 1 Analog Input
- Kohzu Monochrometer
  - 5 Stepper Motors
  - 1 GPIB PZT Controller
  - 1 Serial Heidenhain Precision Encoder Monitor
- Beam Position Monitor (paddle)
  - 1 Stepper Motor (on Monochrometer)
- Al Foil Photodiode
  - 1 Analog Input

Beamline Components (cont)

- Motorized Aperture
  - 4 Stepper Motors
- 2:1 Toriod Mirror M2
  - 3 Stepper Motors
- Split Ion Chamber
  - 4 Analog Inputs
- Ion Chamber from End Station
  - 1 Analog Input
- Beam Position Camera from End Station
  - 1 Video Signal
- Flux Monitor from End Station
  - 1 Analog Input

Totals

- 8 Analog Inputs
- 14 Stepper Motors
- 1 Serial
- 1 GPIB
- 1 Video

PXI Based Hardware

- 1 NI PXI-8156B Controller Running Windows NT w/ 1 Ethernet, 1 GPIB, and 2 Serial Ports
- 1 NI PXI-6052E MIO Card with 8 Differential/16 Single Ended Analog Input Channels
- 4 NI PXI-7344 Motor Control Cards each able to Control 4 Stepper/Servo Motors
- 1 NI PXI-1407 Image Acquisition Card with 1 Video Input

Basic Software Layout

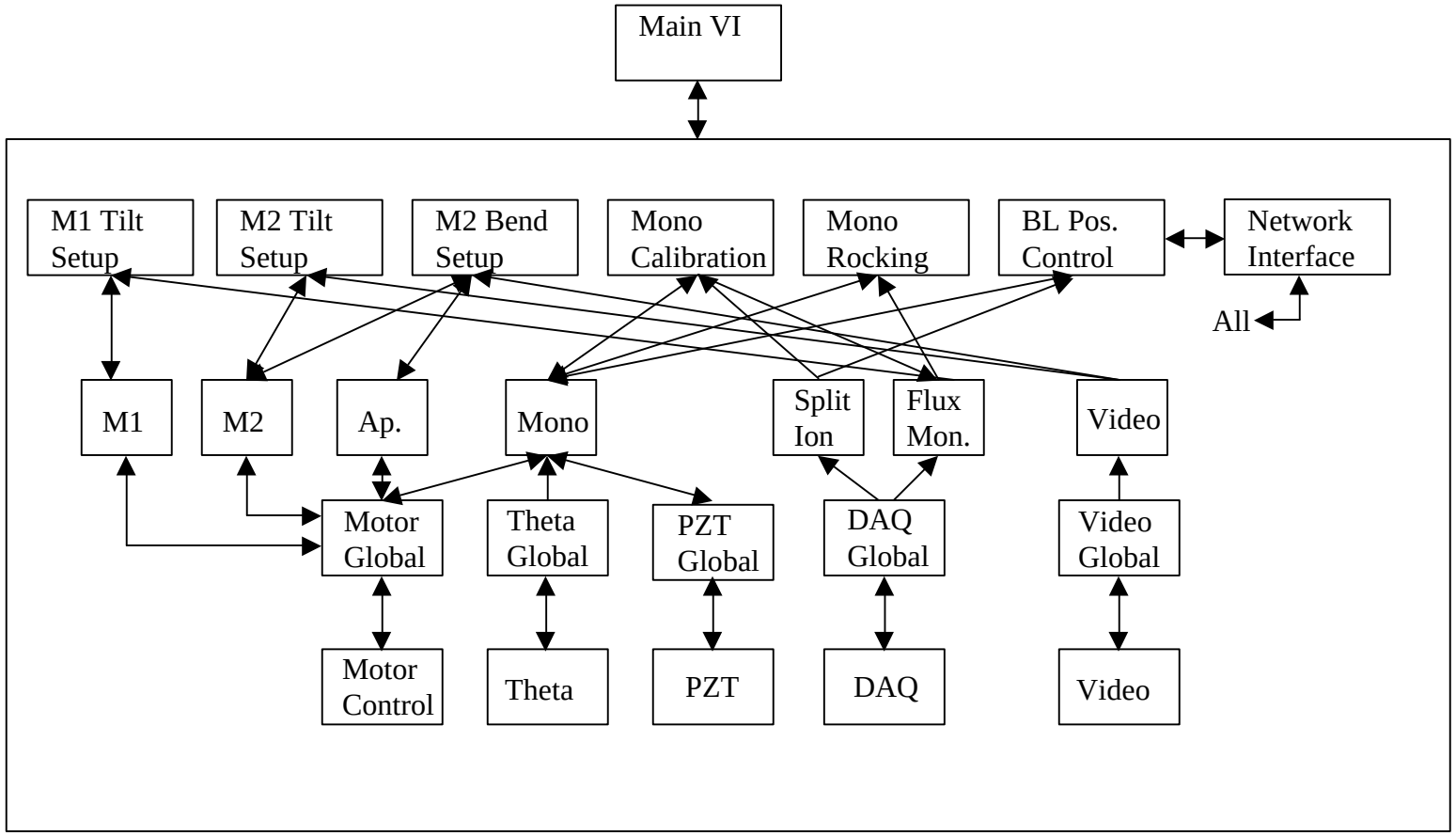
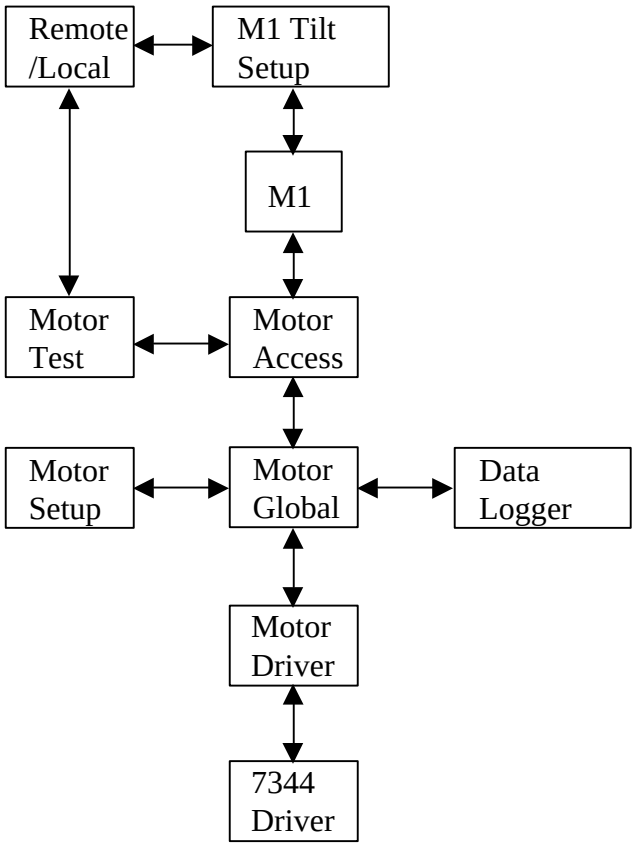
More Detail for Motor Control