BL1201 ES2 ES3
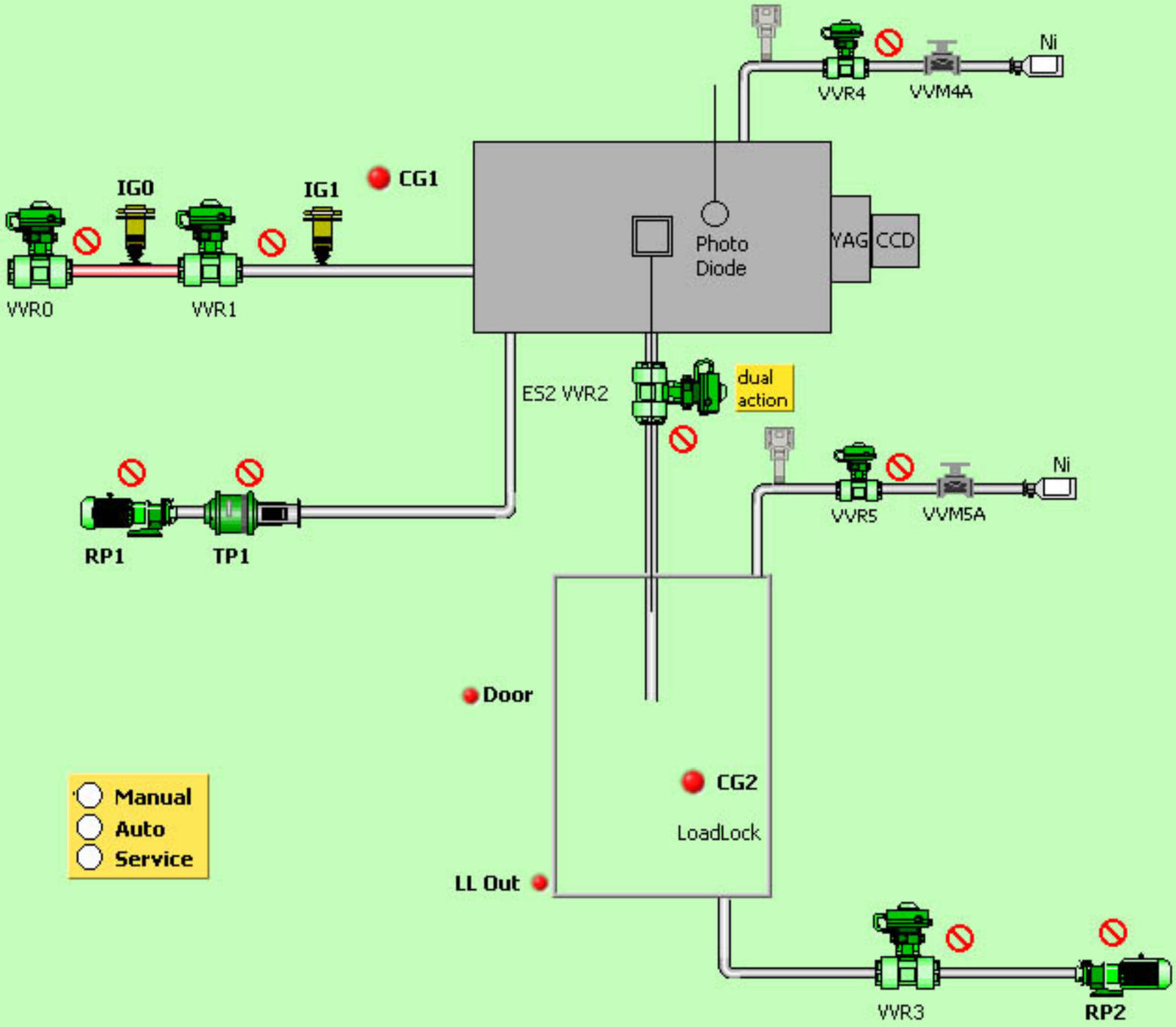
BL1201 ES2 EPS