Beamline 1

Rev 1 Jeremy Mentz 7/1/2013

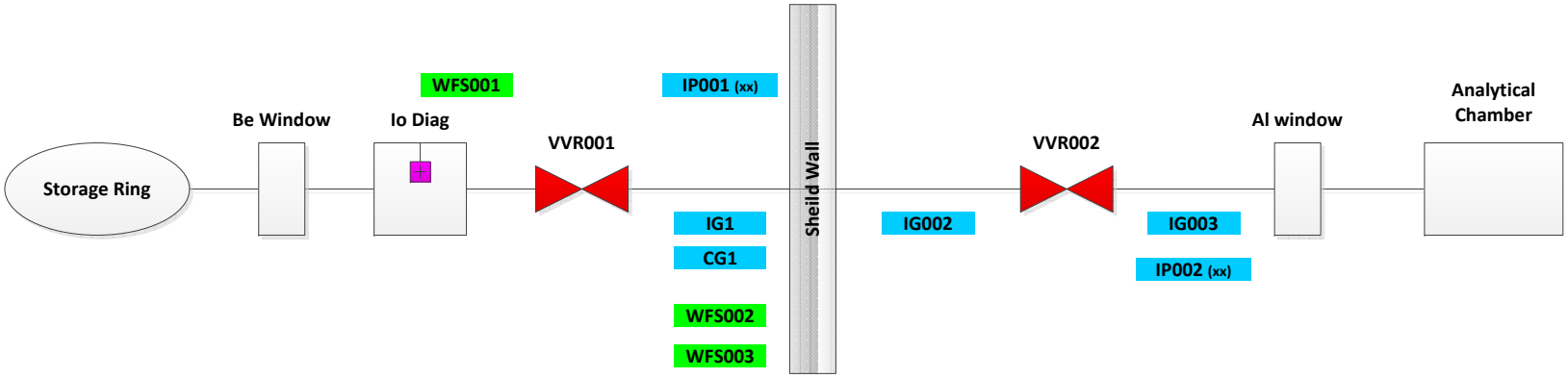

COLOR KEY

- VALVES
- VACUUM
- WATER
- AP, DIAGS
- FAST VALVE

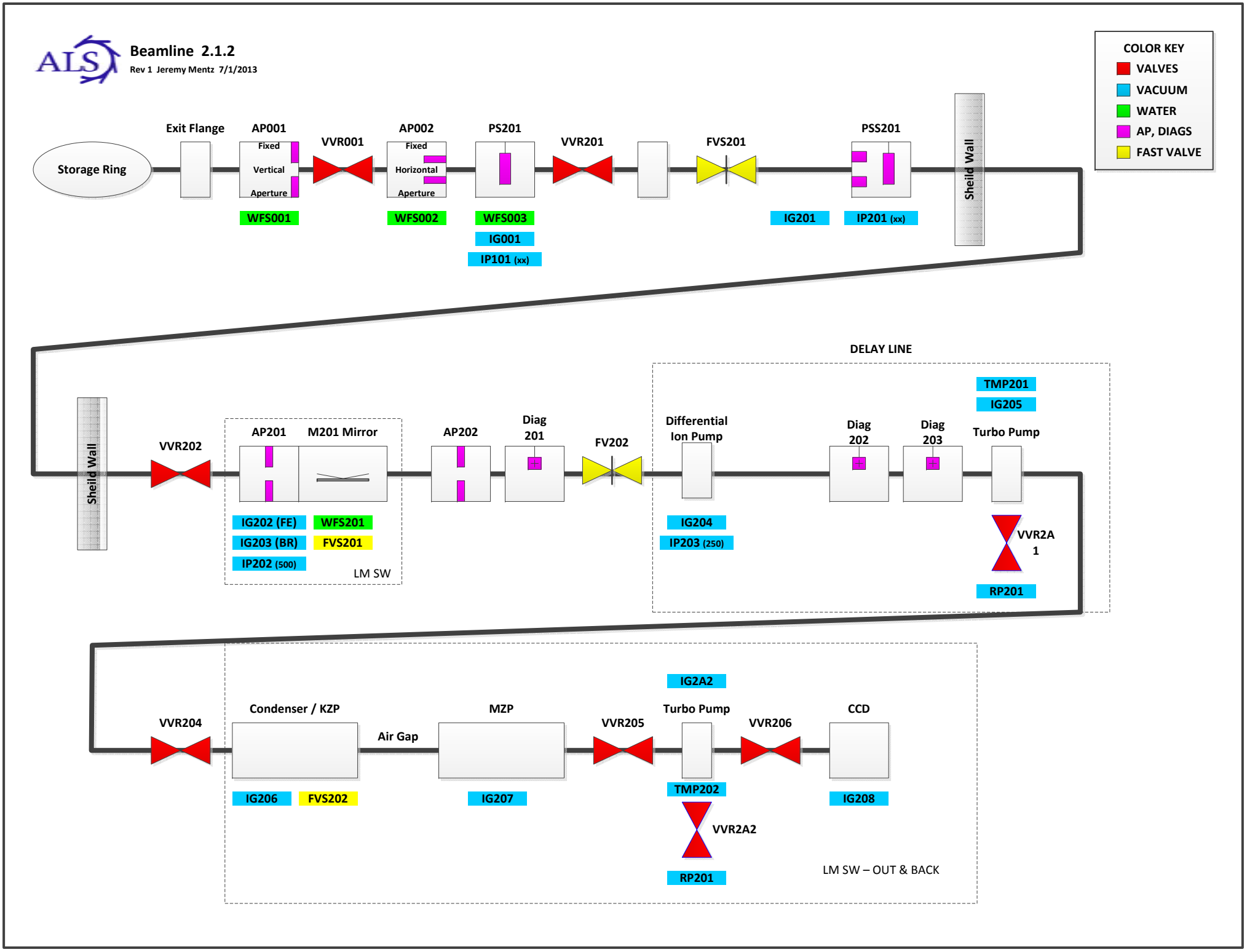
Beamline 2.1.2
Rev 1 Jeremy Mentz 7/1/2013
COLOR KEY
VALVES
VACUUM
WATER
AP, DIAGS
FAST VALVE
Storage Ring
Exit Flange
AP001
Fixed
Vertical
Aperture
WFS001
VVR001
AP002
Fixed
Horizontal
Aperture
WFS002
PS201
WFS003
IG001
IP101 (xx)
VVR201
FVS201
PSS201
IG201
IP201 (xx)
Sheild Wall
Sheild Wall
VVR202
AP201
M201 Mirror
IG202 (FE)
IG203 (BR)
IP202 (500)
WFS201
FVS201
LM SW
AP202
Diag 201
FV202
DELAY LINE
Differential Ion Pump
IG204
IP203 (250)
Diag 202
Diag 203
TMP201
IG205
Turbo Pump
VVR2A 1
RP201
VVR204
Condenser / KZP
IG206
FVS202
Air Gap
MZP
IG207
VVR205
IG2A2
Turbo Pump
TMP202
VVR2A2
RP201
VVR206
CCD
IG208
LM SW – OUT & BACK

Beamline 3.2.1 LIGA
(WCL – West Coast Liga)
Rev 1 Jeremy Mentz 7/1/2013

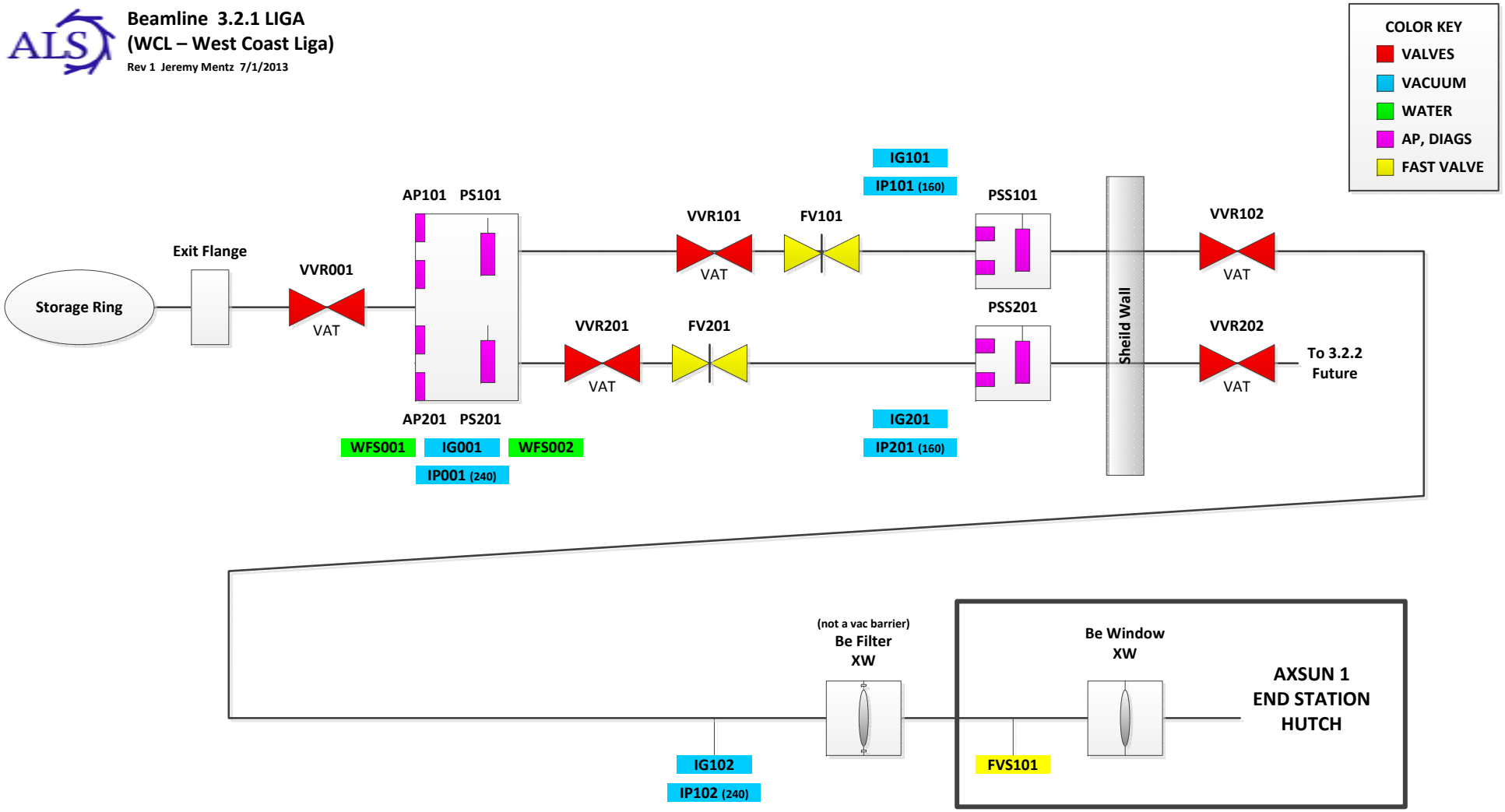

Beamline 3.2.2 LIGA
(Future AXSUN)
Rev 1 Jeremy Mentz 7/1/2013

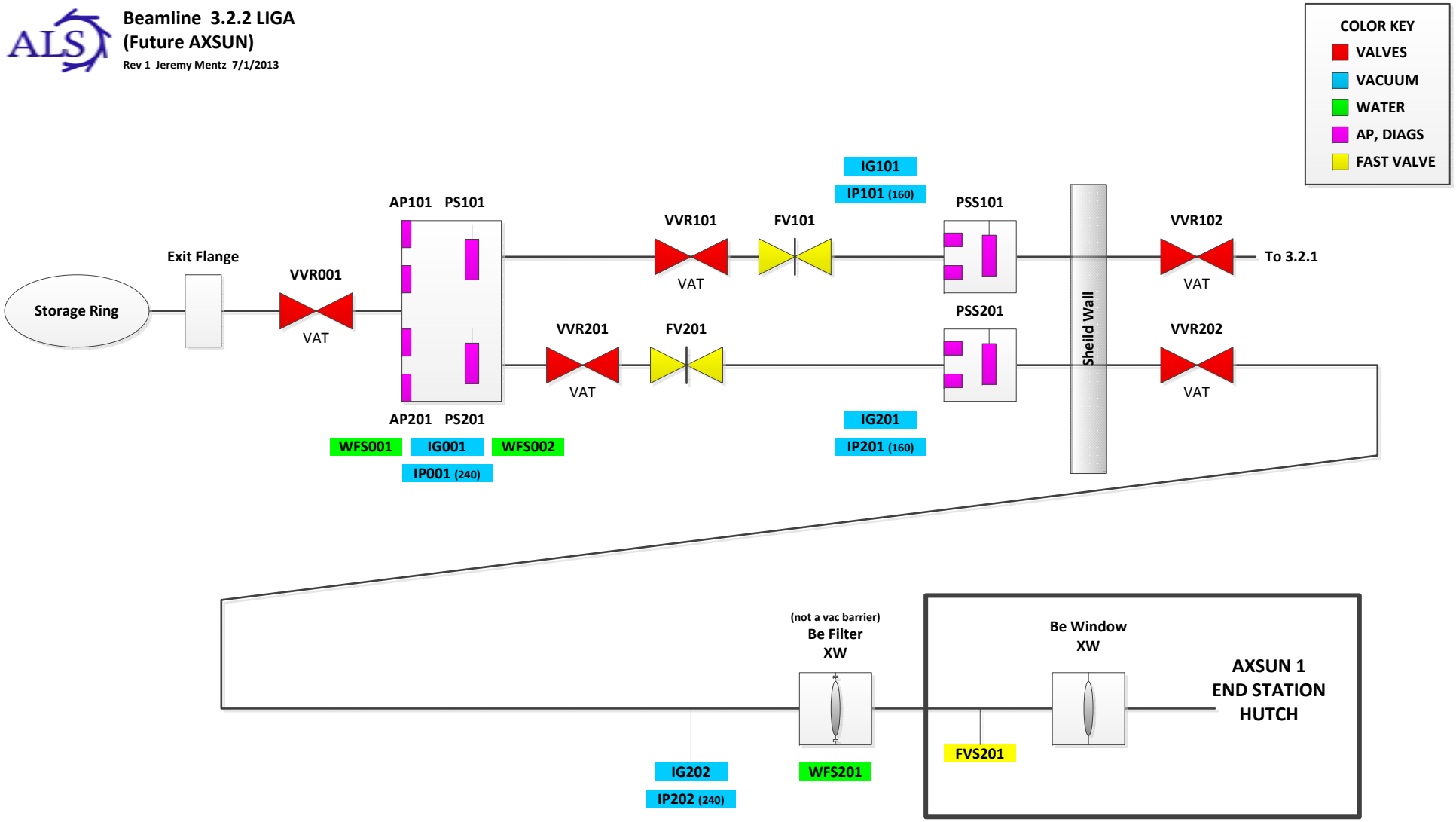

Beamline 3.3.1 (AXSUN)

Rev 1 Jeremy Mentz 7/1/2013

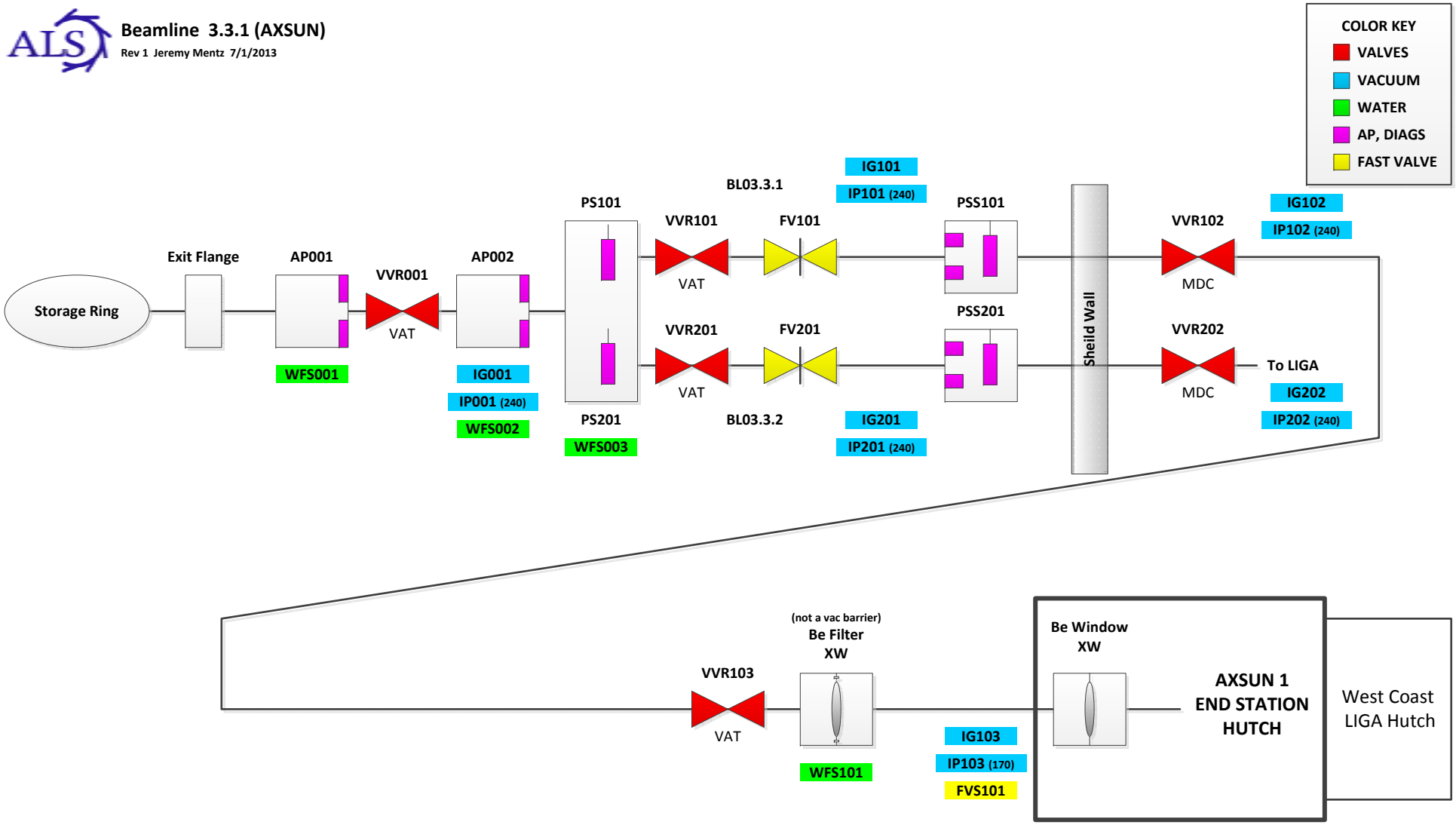

Beamline 3.3.2 (W.C. LIGA)

Rev 1 Jeremy Mentz 7/1/2013

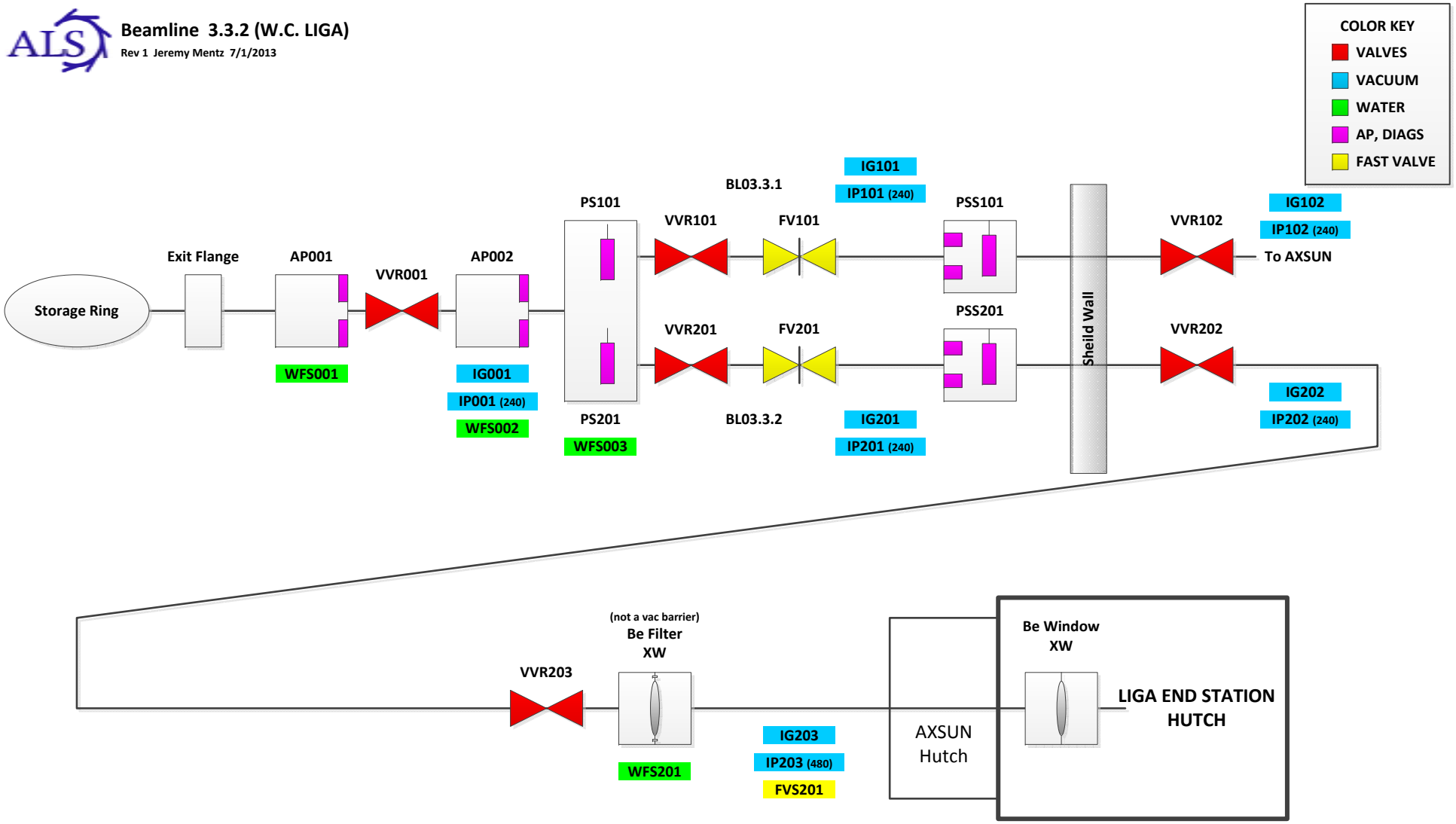

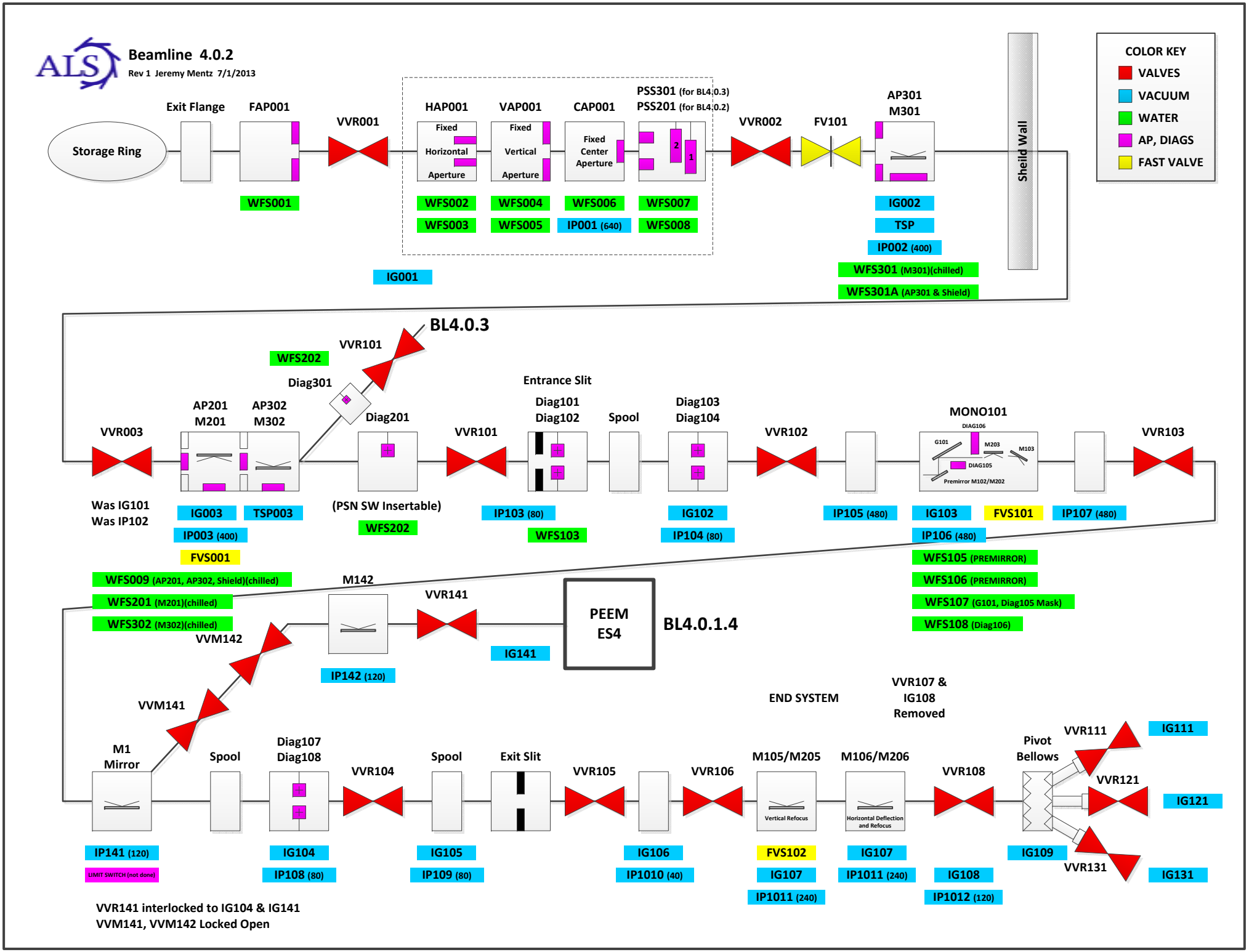
Beamline 4.0.2
Rev 1 Jeremy Mentz 7/1/2013
COLOR KEY
VALVES
VACUUM
WATER
AP, DIAGS
FAST VALVE
Storage Ring
Exit Flange
FAP001
WFS001
VVR001
HAP001
Fixed Horizontal Aperture
WFS002
WFS003
VAP001
Fixed Vertical Aperture
WFS004
WFS005
CAP001
Fixed Center Aperture
WFS006
IP001 (640)
PSS301 (for BL4.0.3)
PSS201 (for BL4.0.2)
WFS007
WFS008
IG001
VVR002
FV101
AP301
M301
IG002
TSP
IP002 (400)
WFS301 (M301)(chilled)
WFS301A (AP301 & Shield)
Sheild Wall
BL4.0.3
VVR101
WFS202
Diag301
VVR003
AP201
M201
AP302
M302
Diag201
Entrance Slit
Diag101
Diag102
Spool
Diag103
Diag104
VVR101
VVR102
MONO101
DIAG106
G101
M203
M103
DIAG105
Premirror M102/M202
VVR103
Was IG101
Was IP102
IG003
TSP003
IP003 (400)
FVS001
WFS009 (AP201, AP302, Shield)(chilled)
WFS201 (M201)(chilled)
WFS302 (M302)(chilled)
(PSN SW Insertable)
WFS202
IP103 (80)
WFS103
IG102
IP104 (80)
IP105 (480)
IG103
FVS101
IP107 (480)
IP106 (480)
WFS105 (PREMIRROR)
WFS106 (PREMIRROR)
WFS107 (G101, Diag105 Mask)
WFS108 (Diag106)
M142
VVR141
PEEM
ES4
BL4.0.1.4
IG141
IP142 (120)
VVM142
VVM141
END SYSTEM
VVR107 &
IG108
Removed
M1
Mirror
Spool
Diag107
Diag108
VVR104
Spool
Exit Slit
VVR105
VVR106
M105/M205
M106/M206
VVR108
Pivot
Bellows
VVR111
IG111
VVR121
IG121
VVR131
IG131
Vertical Refocus
Horizontal Deflection and Refocus
IP141 (120)
LIMIT SWITCH (not done)
IG104
IP108 (80)
IG105
IP109 (80)
IG106
IP1010 (40)
FVS102
IG107
IP1011 (240)
IG107
IP1011 (240)
IG108
IP1012 (120)
IG109
VVR141 interlocked to IG104 & IG141
VVM141, VVM142 Locked Open

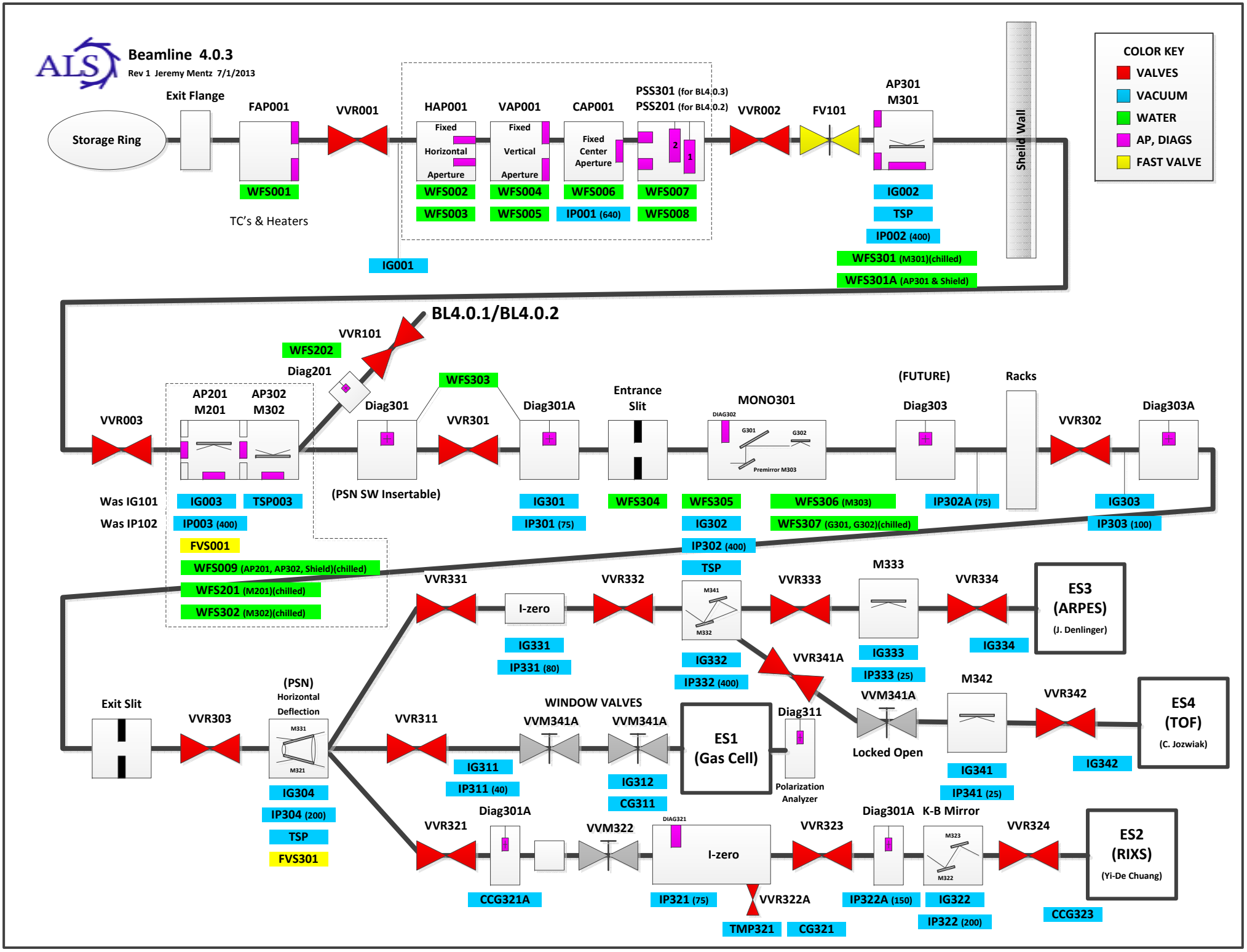
ALS
Beamline 4.0.3
Rev 1 Jeremy Mentz 7/1/2013
COLOR KEY
VALVES
VACUUM
WATER
AP, DIAGS
FAST VALVE
Storage Ring
Exit Flange
FAP001
WFS001
TC's & Heaters
VVR001
HAP001
Fixed Horizontal Aperture
WFS002
WFS003
VAP001
Fixed Vertical Aperture
WFS004
WFS005
CAP001
Fixed Center Aperture
WFS006
IP001 (640)
PSS301 (for BL4.0.3)
PSS201 (for BL4.0.2)
WFS007
WFS008
IG001
VVR002
FV101
AP301
M301
IG002
TSP
IP002 (400)
WFS301 (M301)(chilled)
WFS301A (AP301 & Shield)
Sheild Wall
BL4.0.1/BL4.0.2
VVR101
WFS202
Diag201
VVR003
AP201
M201
AP302
M302
Was IG101
Was IP102
IG003
TSP003
IP003 (400)
FVS001
WFS009 (AP201, AP302, Shield)(chilled)
WFS201 (M201)(chilled)
WFS302 (M302)(chilled)
Diag301
(PSN SW Insertable)
WFS303
VVR301
Diag301A
IG301
IP301 (75)
Entrance Slit
WFS304
MONO301
DIAG302
G301
G302
Premirror M303
WFS305
IG302
IP302 (400)
TSP
WFS306 (M303)
WFS307 (G301, G302)(chilled)
(FUTURE)
Diag303
IP302A (75)
Racks
VVR302
Diag303A
IG303
IP303 (100)
VVR331
I-zero
IG331
IP331 (80)
VVR332
M341
M332
IG332
IP332 (400)
VVR333
M333
IG333
IP333 (25)
VVR334
IG334
ES3
(ARPES)
(J. Denlinger)
VVR341A
Exit Slit
VVR303
(PSN)
Horizontal Deflection
M331
M321
IG304
IP304 (200)
TSP
FVS301
VVR311
WINDOW VALVES
VVM341A
VVM341A
IG311
IP311 (40)
IG312
CG311
ES1
(Gas Cell)
Diag311
Polarization Analyzer
VVM341A
Locked Open
M342
IG341
IP341 (25)
VVR342
IG342
ES4
(TOF)
(C. Jozwiak)
VVR321
Diag301A
CCG321A
VVM322
DIAG321
I-zero
IP321 (75)
VVR322A
TMP321
CG321
VVR323
Diag301A
IP322A (150)
K-B Mirror
M323
M322
IG322
IP322 (200)
VVR324
CCG323
ES2
(RIXS)
(Yi-De Chuang)

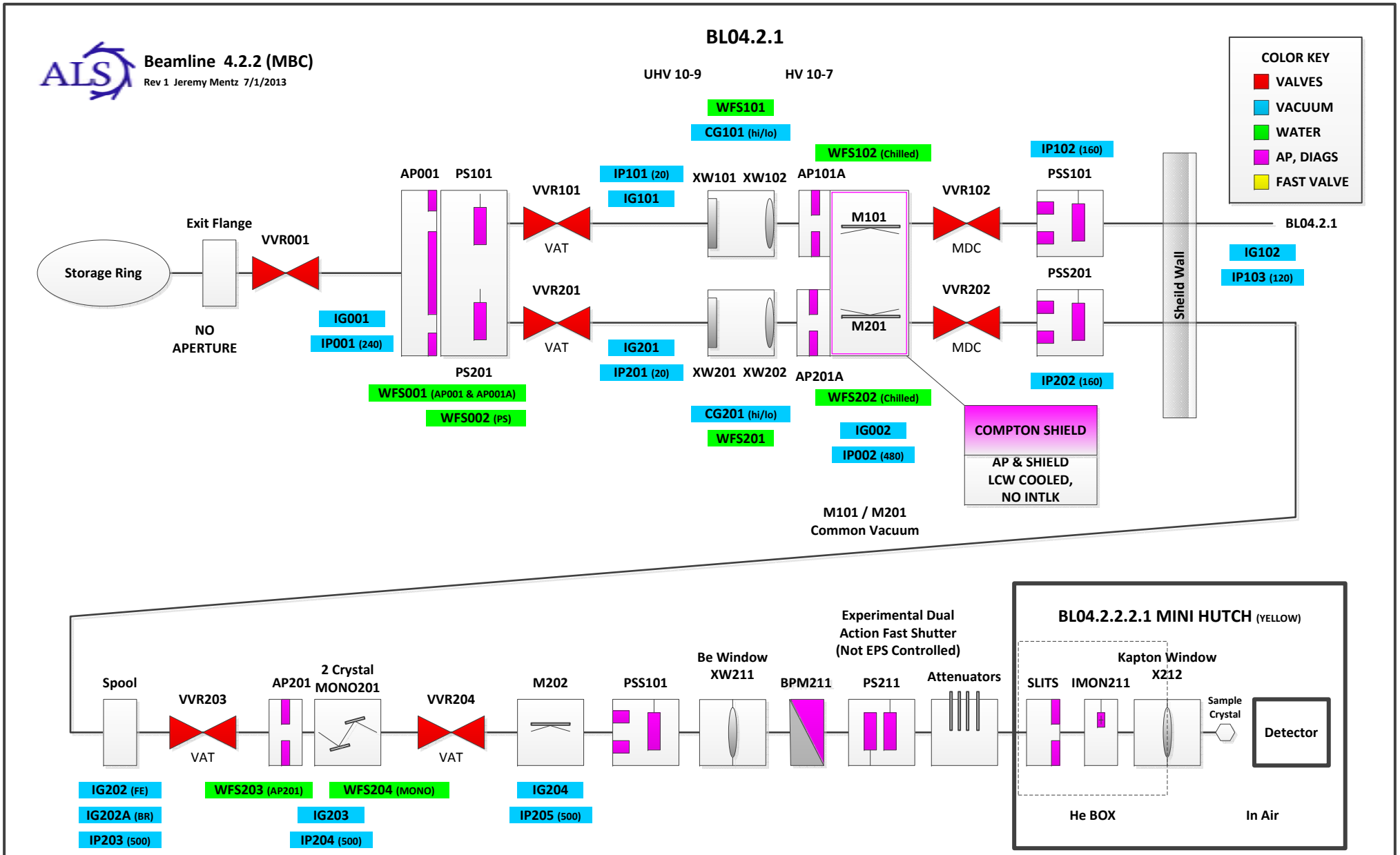
BL04.2.1
Beamline 4.2.2 (MBC)
Rev 1 Jeremy Mentz 7/1/2013
UHV 10-9
HV 10-7
COLOR KEY
VALVES
VACUUM
WATER
AP, DIAGS
FAST VALVE
WFS101
CG101 (hi/lo)
WFS102 (Chilled)
IP102 (160)
AP001
PS101
IP101 (20)
XW101 XW102
AP101A
VVR101
PSS101
IG101
M101
VVR102
BL04.2.1
Exit Flange
VVR001
VAT
MDC
Storage Ring
IG102
IP103 (120)
PSS201
VVR201
VVR202
Sheild Wall
M201
NO
APERTURE
IG001
IP001 (240)
VAT
MDC
IG201
IP201 (20)
XW201 XW202
AP201A
IP202 (160)
PS201
WFS001 (AP001 & AP001A)
WFS002 (PS)
WFS202 (Chilled)
CG201 (hi/lo)
WFS201
IG002
IP002 (480)
COMPTON SHIELD
AP & SHIELD
LCW COOLED,
NO INTLK
M101 / M201
Common Vacuum
BL04.2.2.2.1 MINI HUTCH (YELLOW)
Experimental Dual
Action Fast Shutter
(Not EPS Controlled)
Kapton Window
X212
Be Window
XW211
Spool
VVR203
AP201
2 Crystal
MONO201
VVR204
M202
PSS101
BPM211
PS211
Attenuators
SLITS
IMON211
Sample
Crystal
Detector
VAT
VAT
IG202 (FE)
IG202A (BR)
IP203 (500)
WFS203 (AP201)
WFS204 (MONO)
IG203
IP204 (500)
IG204
IP205 (500)
He BOX
In Air

Beamline 4.3 Front End

Rev 1 Jeremy Mentz 7/1/2013

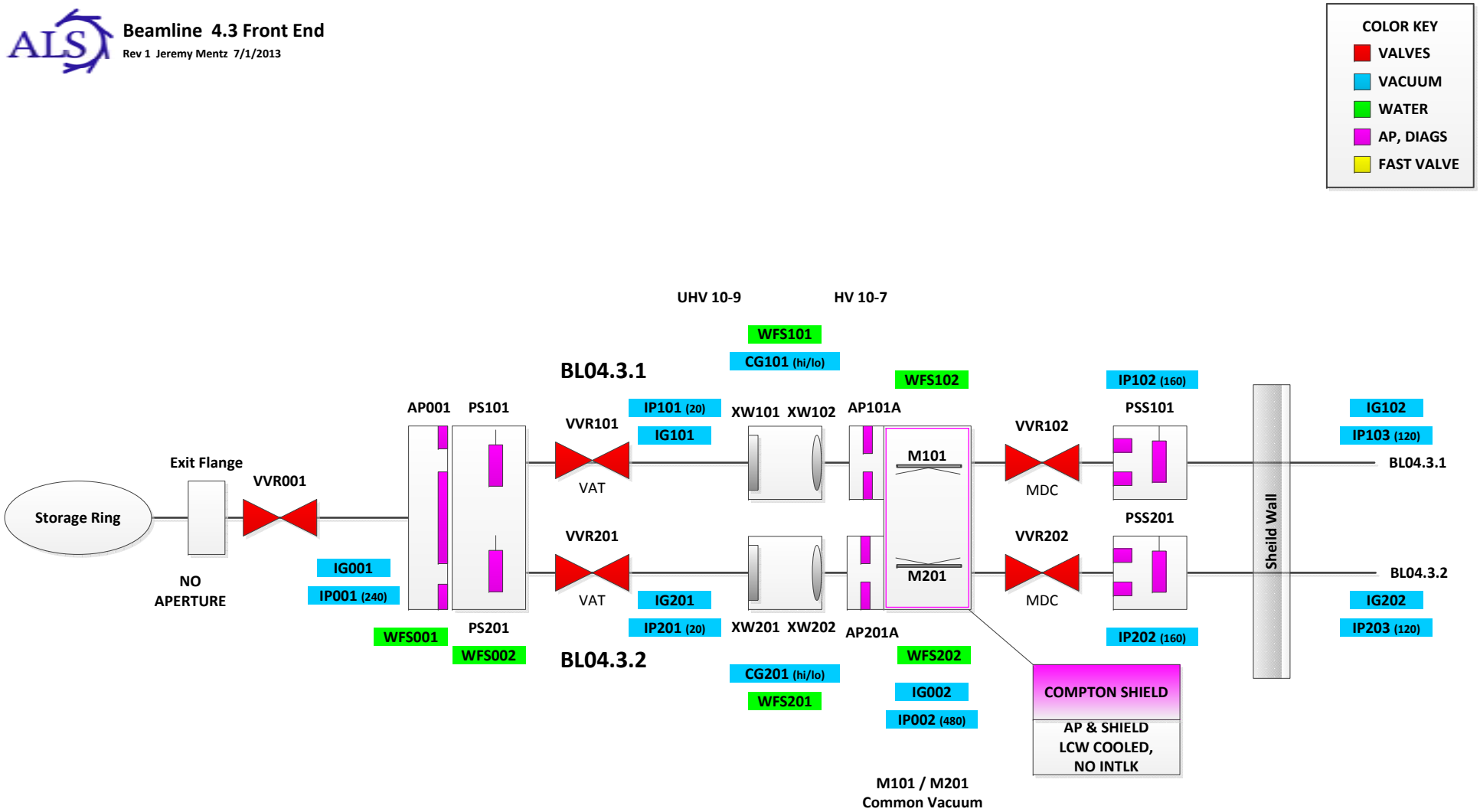

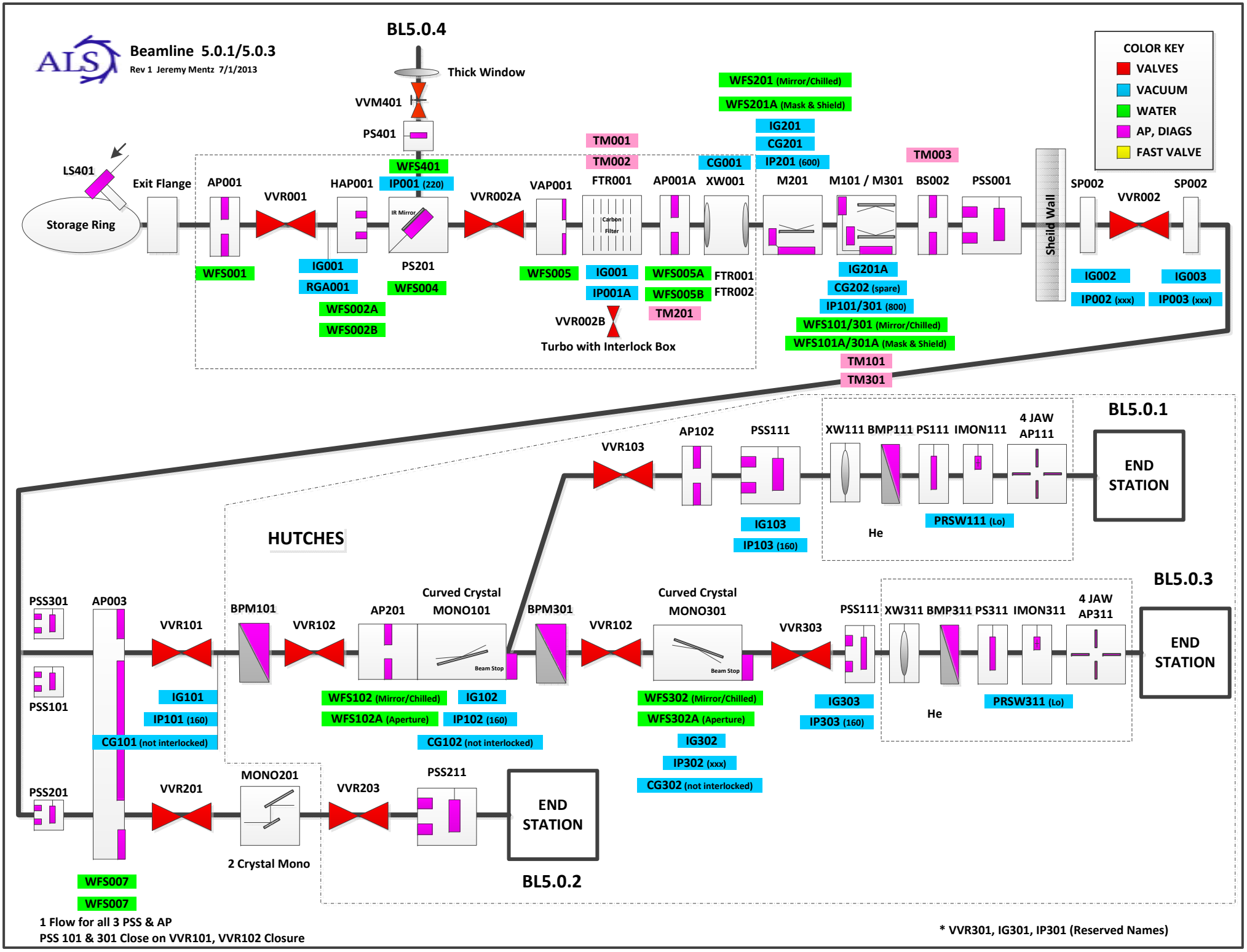
Beamline 5.0.1/5.0.3
Rev 1 Jeremy Mentz 7/1/2013
BL5.0.4
Thick Window
VVM401
PS401
WFS401
IP001 (220)
LS401
Storage Ring
Exit Flange
AP001
WFS001
VVR001
HAP001
IG001
RGA001
WFS002A
WFS002B
IR Mirror
PS201
WFS004
VVR002A
VAP001
WFS005
TM001
TM002
FTR001
Carbon Filter
IG001
IP001A
VVR002B
Turbo with Interlock Box
AP001A
WFS005A
WFS005B
TM201
CG001
XW001
FTR001
FTR002
WFS201 (Mirror/Chilled)
WFS201A (Mask & Shield)
IG201
CG201
IP201 (600)
M201
M101 / M301
IG201A
CG202 (spare)
IP101/301 (800)
WFS101/301 (Mirror/Chilled)
WFS101A/301A (Mask & Shield)
TM101
TM301
TM003
BS002
PSS001
Sheild Wall
SP002
VVR002
SP002
IG002
IP002 (xxx)
IG003
IP003 (xxx)
COLOR KEY
VALVES
VACUUM
WATER
AP, DIAGS
FAST VALVE
BL5.0.1
VVR103
AP102
PSS111
IG103
IP103 (160)
XW111 BMP111 PS111 IMON111
4 JAW AP111
He
PRSW111 (Lo)
END STATION
HUTCHES
PSS301
AP003
PSS101
PSS201
VVR101
IG101
IP101 (160)
CG101 (not interlocked)
BPM101
VVR102
AP201
Curved Crystal MONO101
Beam Stop
WFS102 (Mirror/Chilled)
WFS102A (Aperture)
IG102
IP102 (160)
CG102 (not interlocked)
BPM301
VVR102
Curved Crystal MONO301
Beam Stop
WFS302 (Mirror/Chilled)
WFS302A (Aperture)
IG302
IP302 (xxx)
CG302 (not interlocked)
VVR303
PSS111
IG303
IP303 (160)
BL5.0.3
XW311 BMP311 PS311 IMON311
4 JAW AP311
He
PRSW311 (Lo)
END STATION
VVR201
MONO201
2 Crystal Mono
VVR203
PSS211
END STATION
BL5.0.2
WFS007
WFS007
1 Flow for all 3 PSS & AP
PSS 101 & 301 Close on VVR101, VVR102 Closure
* VVR301, IG301, IP301 (Reserved Names)

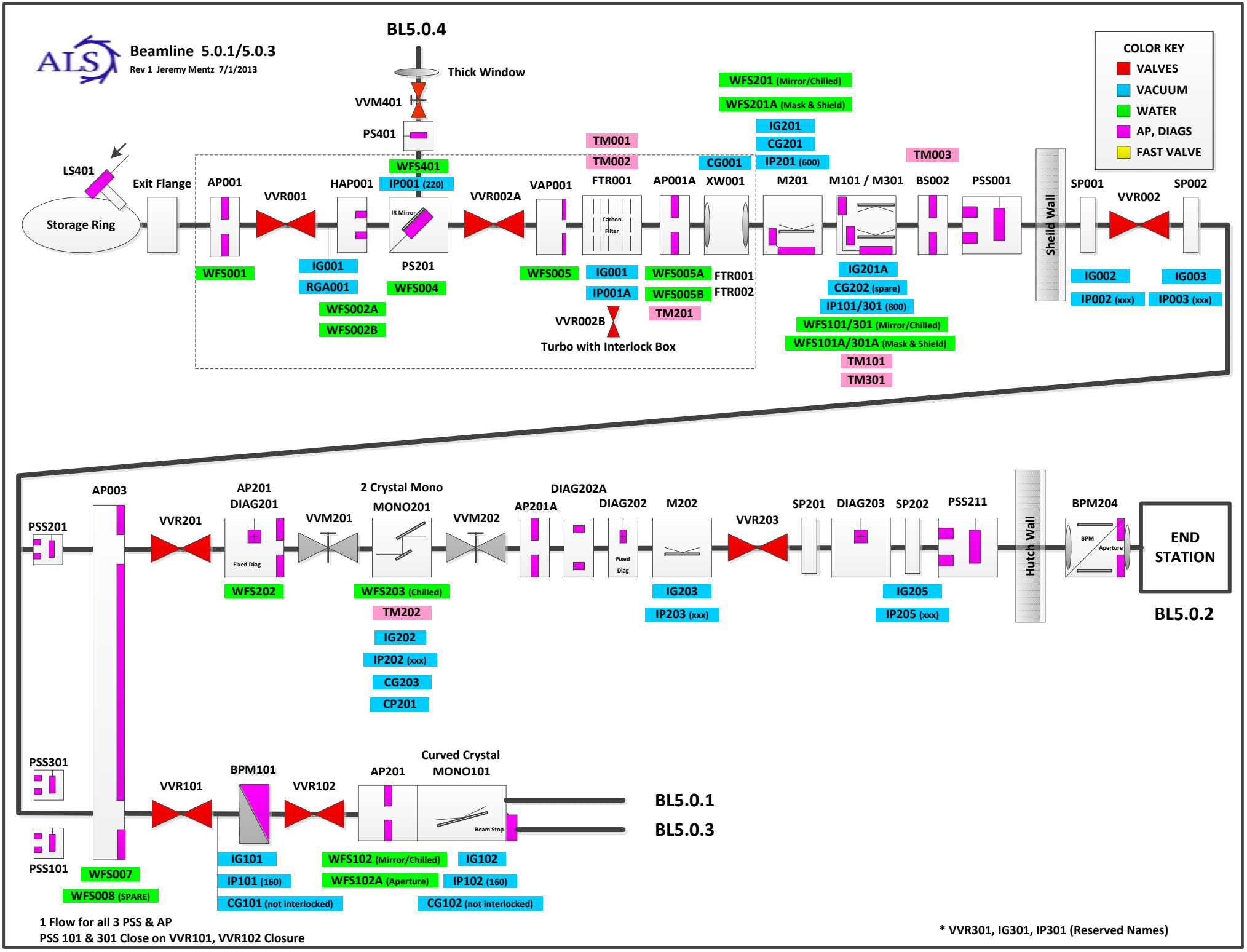
Beamline 5.0.1/5.0.3
Rev 1 Jeremy Mentz 7/1/2013
BL5.0.4
Thick Window
VVM401
PS401
WFS401
IP001 (220)
LS401
Storage Ring
Exit Flange
AP001
WFS001
VVR001
HAP001
IG001
RGA001
WFS002A
WFS002B
IR Mirror
PS201
WFS004
VVR002A
VAP001
WFS005
TM001
TM002
FTR001
Carbon Filter
IG001
IP001A
VVR002B
Turbo with Interlock Box
AP001A
WFS005A
WFS005B
TM201
CG001
XW001
FTR001
FTR002
WFS201 (Mirror/Chilled)
WFS201A (Mask & Shield)
IG201
CG201
IP201 (600)
M201
M101 / M301
IG201A
CG202 (spare)
IP101/301 (800)
WFS101/301 (Mirror/Chilled)
WFS101A/301A (Mask & Shield)
TM101
TM301
TM003
BS002
PSS001
Sheild Wall
SP001
IG002
IP002 (xxx)
VVR002
SP002
IG003
IP003 (xxx)
COLOR KEY
VALVES
VACUUM
WATER
AP, DIAGS
FAST VALVE
PSS201
AP003
VVR201
AP201
DIAG201
Fixed Diag
WFS202
VVM201
2 Crystal Mono
MONO201
WFS203 (Chilled)
TM202
IG202
IP202 (xxx)
CG203
CP201
VVM202
AP201A
DIAG202A
DIAG202
Fixed Diag
M202
IG203
IP203 (xxx)
VVR203
SP201
DIAG203
SP202
IG205
IP205 (xxx)
PSS211
Hutch Wall
BPM204
BPM
Aperture
END STATION
BL5.0.2
PSS301
PSS101
VVR101
BPM101
VVR102
AP201
Curved Crystal
MONO101
Beam Stop
BL5.0.1
BL5.0.3
WFS007
WFS008 (SPARE)
IG101
IP101 (160)
CG101 (not interlocked)
WFS102 (Mirror/Chilled)
WFS102A (Aperture)
IG102
IP102 (160)
CG102 (not interlocked)
1 Flow for all 3 PSS & AP
PSS 101 & 301 Close on VVR101, VVR102 Closure
* VVR301, IG301, IP301 (Reserved Names)

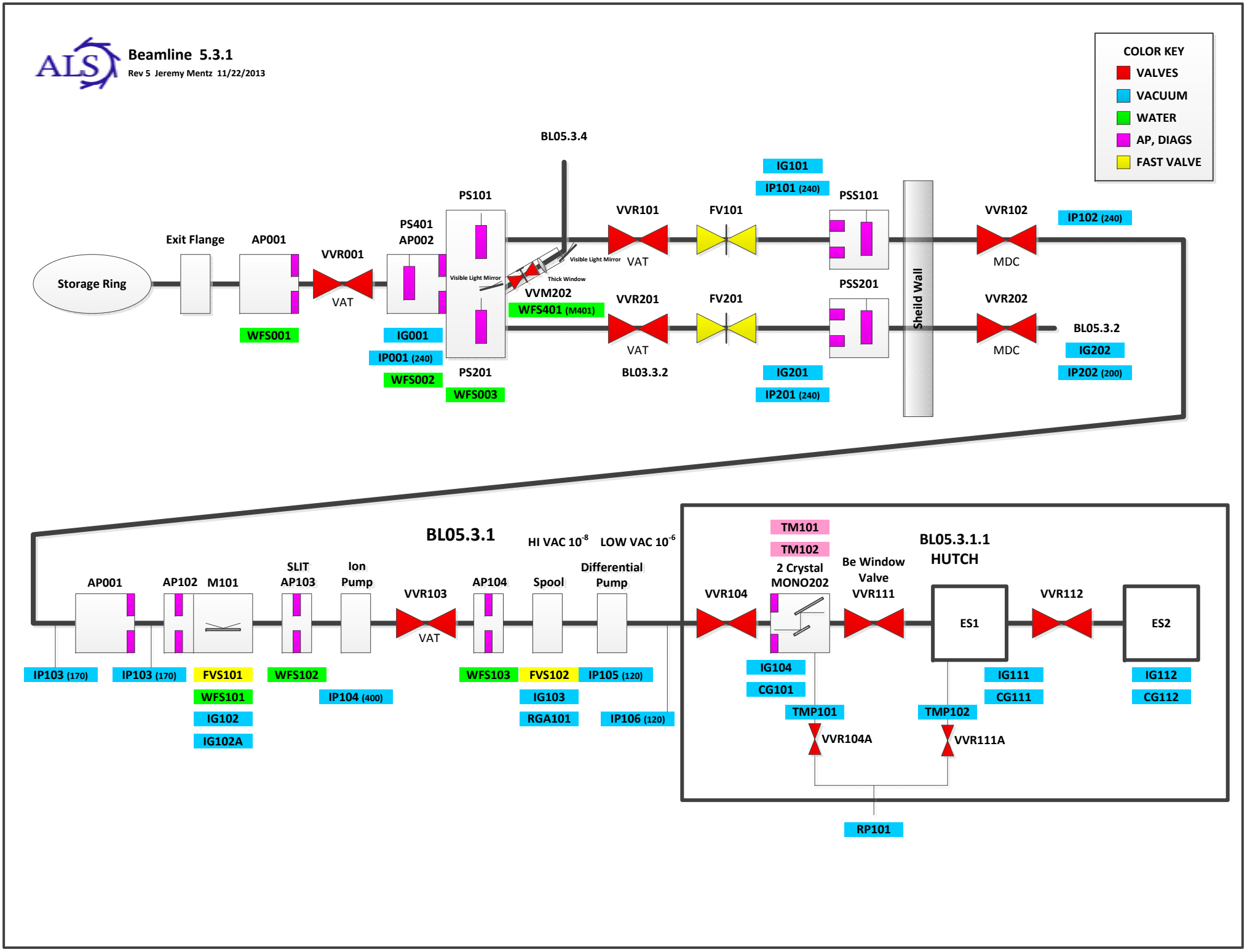
Beamline 5.3.1
Rev 5 Jeremy Mentz 11/22/2013
COLOR KEY
VALVES
VACUUM
WATER
AP, DIAGS
FAST VALVE
BL05.3.4
Storage Ring
Exit Flange
AP001
WFS001
VVR001
VAT
PS401
AP002
IG001
IP001 (240)
WFS002
PS101
Visible Light Mirror
PS201
WFS003
Visible Light Mirror
Thick Window
VVM202
WFS401 (M401)
VVR101
VAT
VVR201
VAT
BL03.3.2
FV101
FV201
IG101
IP101 (240)
IG201
IP201 (240)
PSS101
PSS201
Sheild Wall
VVR102
MDC
VVR202
MDC
IP102 (240)
BL05.3.2
IG202
IP202 (200)
BL05.3.1
AP001
IP103 (170)
AP102
IP103 (170)
M101
FVS101
WFS101
IG102
IG102A
SLIT
AP103
WFS102
Ion
Pump
IP104 (400)
VVR103
VAT
AP104
WFS103
HI VAC 10-8
Spool
FVS102
IG103
RGA101
LOW VAC 10-6
Differential
Pump
IP105 (120)
IP106 (120)
BL05.3.1.1
HUTCH
VVR104
TM101
TM102
2 Crystal
MONO202
IG104
CG101
TMP101
VVR104A
Be Window
Valve
VVR111
TMP102
VVR111A
ES1
IG111
CG111
VVR112
ES2
IG112
CG112
RP101

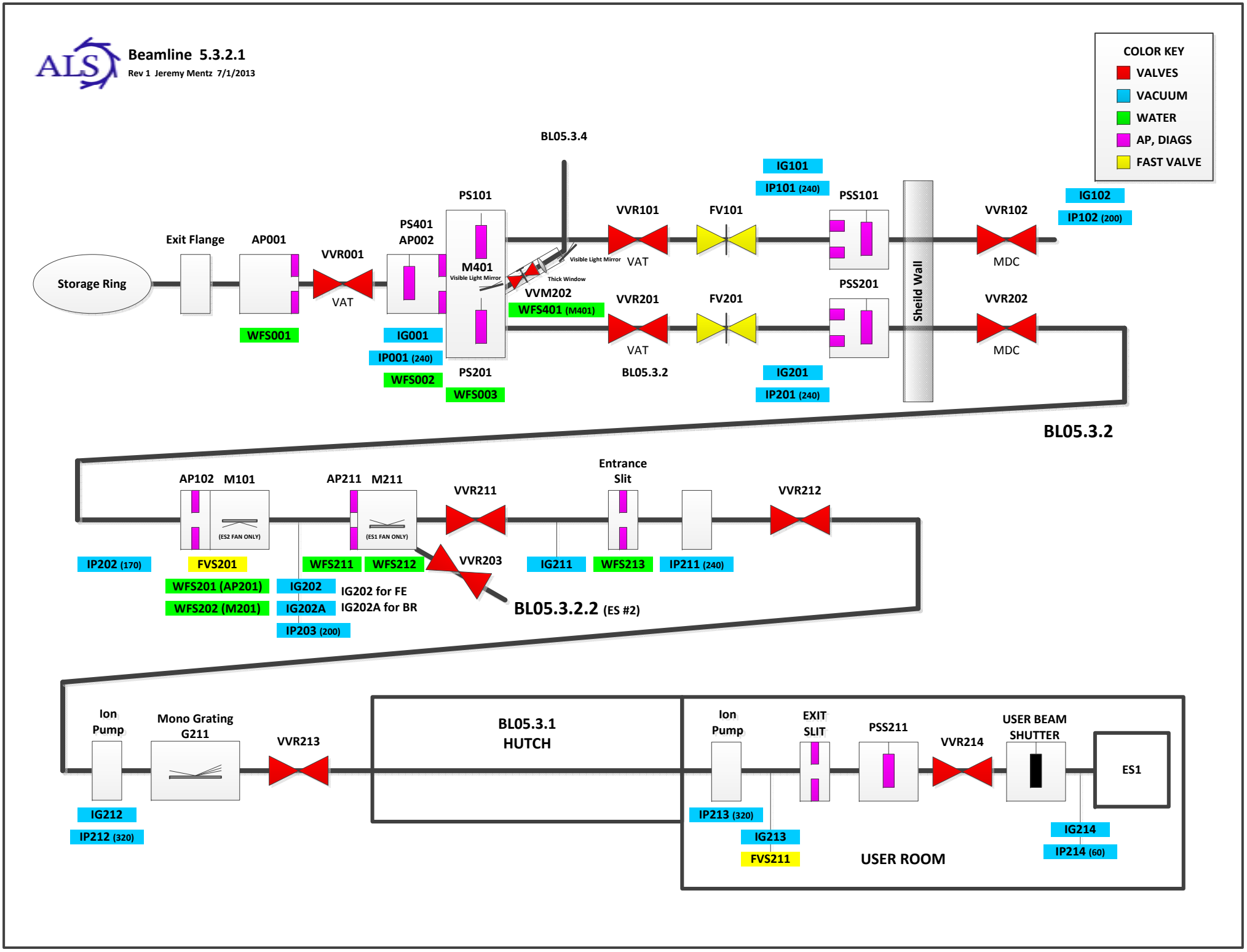
Beamline 5.3.2.1
Rev 1 Jeremy Mentz 7/1/2013
COLOR KEY
VALVES
VACUUM
WATER
AP, DIAGS
FAST VALVE
BL05.3.4
Storage Ring
Exit Flange
AP001
WFS001
VVR001
VAT
PS401
AP002
IG001
IP001 (240)
WFS002
PS101
M401
Visible Light Mirror
PS201
WFS003
Visible Light Mirror
Thick Window
VVM202
WFS401 (M401)
VVR101
VAT
VVR201
VAT
BL05.3.2
FV101
FV201
IG101
IP101 (240)
PSS101
PSS201
IG201
IP201 (240)
Sheild Wall
VVR102
MDC
VVR202
MDC
IG102
IP102 (200)
BL05.3.2
AP102
M101
(ES2 FAN ONLY)
IP202 (170)
FVS201
WFS201 (AP201)
WFS202 (M201)
AP211
M211
(ES1 FAN ONLY)
WFS211
WFS212
IG202
IG202A
IP203 (200)
IG202 for FE
IG202A for BR
VVR211
VVR203
BL05.3.2.2 (ES #2)
IG211
Entrance Slit
WFS213
IP211 (240)
VVR212
Ion Pump
IG212
IP212 (320)
Mono Grating G211
VVR213
BL05.3.1 HUTCH
Ion Pump
IP213 (320)
IG213
FVS211
EXIT SLIT
PSS211
VVR214
USER BEAM SHUTTER
IG214
IP214 (60)
ES1
USER ROOM

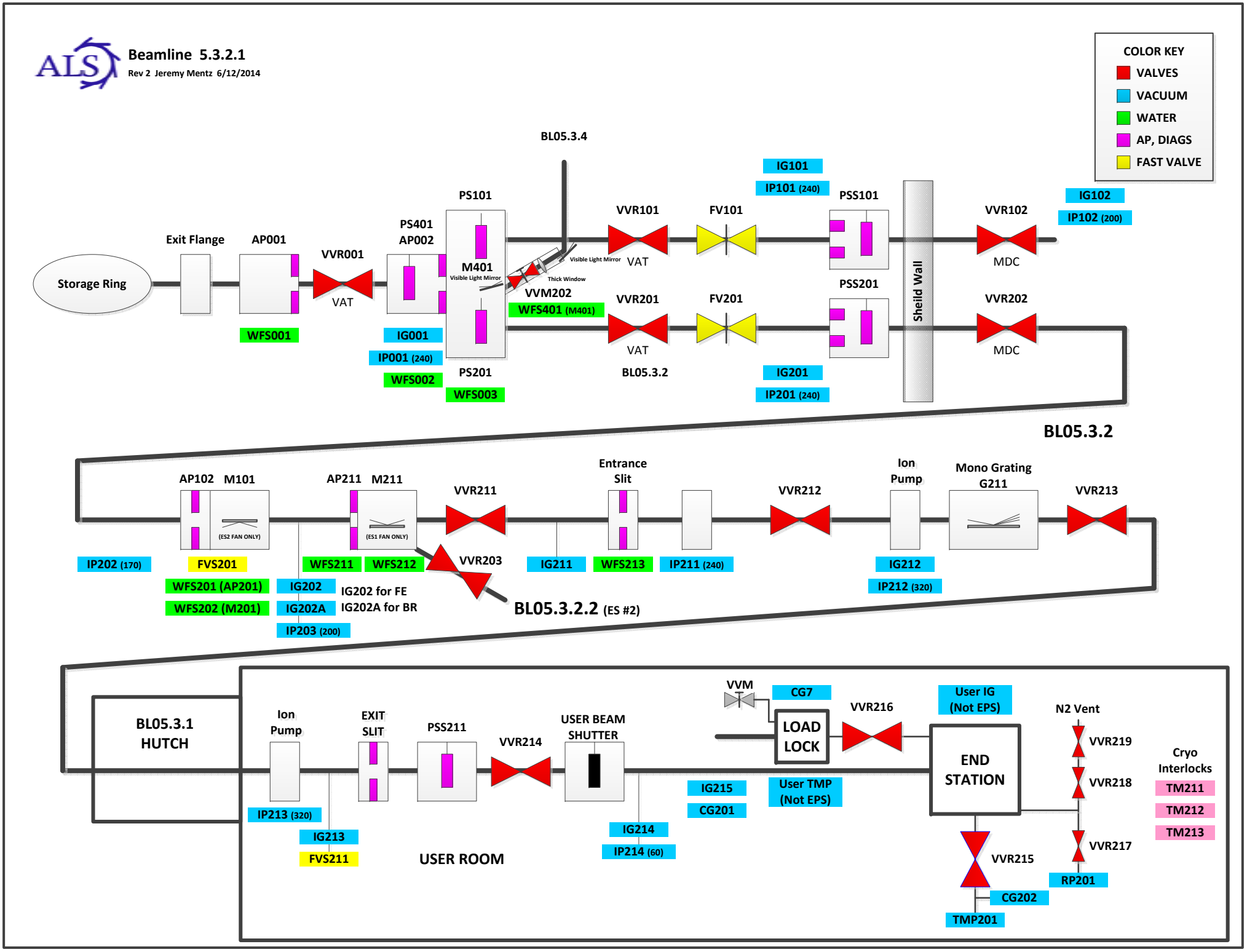
Beamline 5.3.2.1
Rev 2 Jeremy Mentz 6/12/2014
COLOR KEY
VALVES
VACUUM
WATER
AP, DIAGS
FAST VALVE
BL05.3.4
Storage Ring
Exit Flange
AP001
WFS001
VVR001
VAT
PS401
AP002
IG001
IP001 (240)
WFS002
PS101
M401
Visible Light Mirror
PS201
WFS003
Visible Light Mirror
Thick Window
VVM202
WFS401 (M401)
VVR101
VAT
VVR201
VAT
BL05.3.2
FV101
FV201
IG101
IP101 (240)
IG201
IP201 (240)
PSS101
PSS201
Sheild Wall
VVR102
MDC
VVR202
MDC
IG102
IP102 (200)
BL05.3.2
AP102
M101
(ES2 FAN ONLY)
IP202 (170)
FVS201
WFS201 (AP201)
WFS202 (M201)
IG202
IG202A
IP203 (200)
IG202 for FE
IG202A for BR
AP211
M211
(ES1 FAN ONLY)
WFS211
WFS212
VVR211
VVR203
BL05.3.2.2 (ES #2)
IG211
Entrance Slit
WFS213
IP211 (240)
VVR212
Ion Pump
IG212
IP212 (320)
Mono Grating G211
VVR213
BL05.3.1 HUTCH
Ion Pump
IP213 (320)
IG213
FVS211
EXIT SLIT
PSS211
USER ROOM
VVR214
USER BEAM SHUTTER
IG214
IP214 (60)
IG215
CG201
VVM
CG7
LOAD LOCK
User TMP (Not EPS)
VVR216
User IG (Not EPS)
END STATION
VVR215
CG202
TMP201
N2 Vent
VVR219
VVR218
VVR217
RP201
Cryo Interlocks
TM211
TM212
TM213

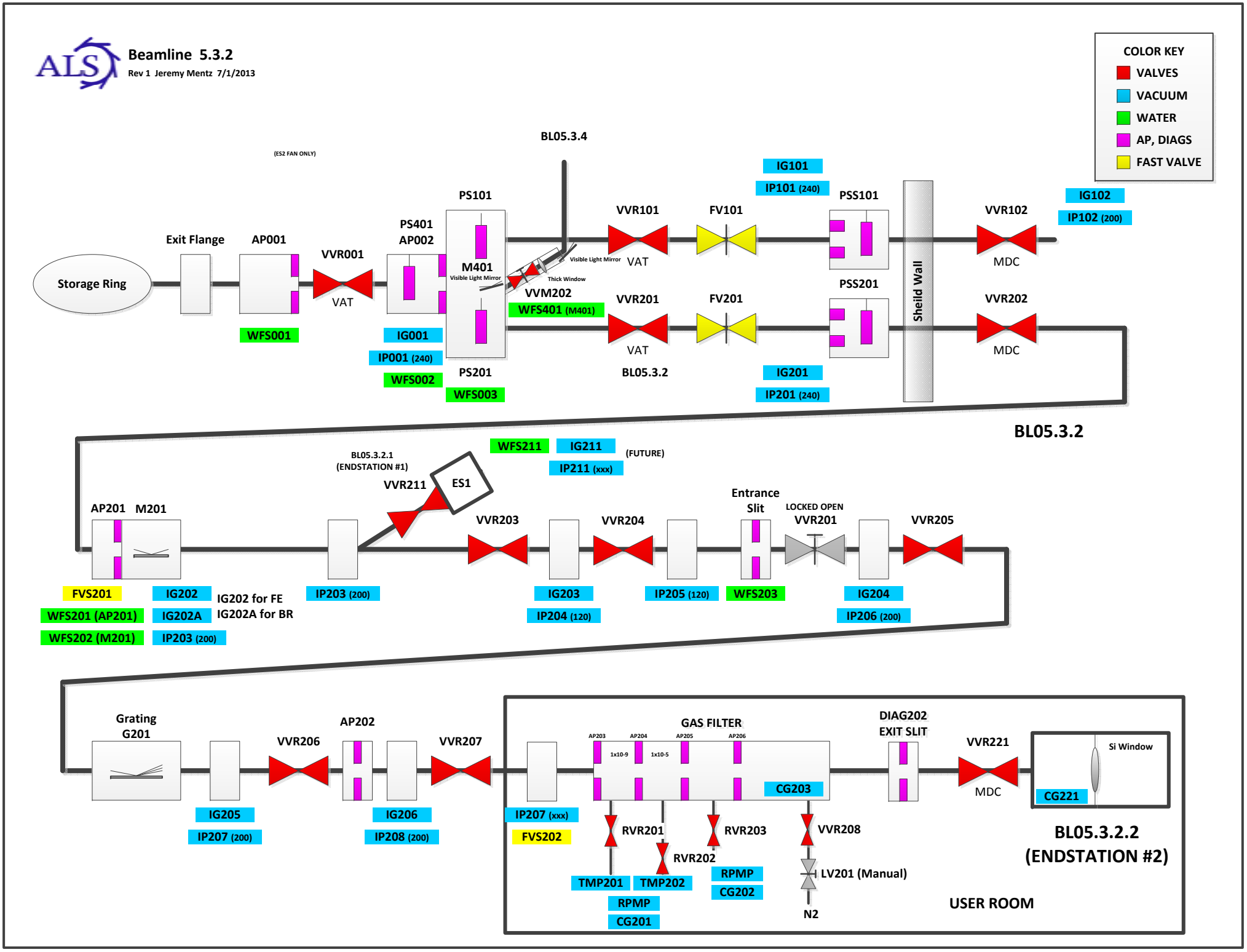
ALS
Beamline 5.3.2
Rev 1 Jeremy Mentz 7/1/2013
COLOR KEY
VALVES
VACUUM
WATER
AP, DIAGS
FAST VALVE
BL05.3.4
(ES2 FAN ONLY)
Storage Ring
Exit Flange
AP001
WFS001
VVR001
VAT
PS401
AP002
IG001
IP001 (240)
WFS002
PS101
M401
Visible Light Mirror
PS201
WFS003
Visible Light Mirror
Thick Window
VVM202
WFS401 (M401)
VVR101
VAT
VVR201
VAT
BL05.3.2
FV101
FV201
IG101
IP101 (240)
IG201
IP201 (240)
PSS101
PSS201
Sheild Wall
VVR102
MDC
VVR202
MDC
IG102
IP102 (200)
BL05.3.2
BL05.3.2.1
(ENDSTATION #1)
VVR211
ES1
WFS211
IG211
IP211 (xxx)
(FUTURE)
AP201
M201
FVS201
WFS201 (AP201)
WFS202 (M201)
IG202
IG202A
IP203 (200)
IG202 for FE
IG202A for BR
IP203 (200)
VVR203
IG203
IP204 (120)
VVR204
IP205 (120)
Entrance
Slit
WFS203
LOCKED OPEN
VVR201
IG204
IP206 (200)
VVR205
Grating
G201
IG205
IP207 (200)
VVR206
AP202
IG206
IP208 (200)
VVR207
IP207 (xxx)
FVS202
GAS FILTER
AP203
AP204
AP205
AP206
1x10-9
1x10-5
CG203
RVR201
RVR202
RVR203
TMP201
TMP202
RPMP
CG201
RPMP
CG202
VVR208
LV201 (Manual)
N2
DIAG202
EXIT SLIT
VVR221
MDC
Si Window
CG221
BL05.3.2.2
(ENDSTATION #2)
USER ROOM

Beamline 5.4 (IR) EPS dwg.

Rev 1 J Mentz 7/13/12

NOTES: ALL FAULTS LATCH IN FE EPS; KEY ACCESS
EPS will be part of front-end; no separate branchline EPS
1) EPS controls M101
M101 default condition is in beam.
M101 should not be moved with beam on.
Pop-up warning displayed when someone tries to move mirror.
2) WFS101 fault or M101 movement kills SR RF.
3) VVR101 has standard interlocks to IG 101 & 102.

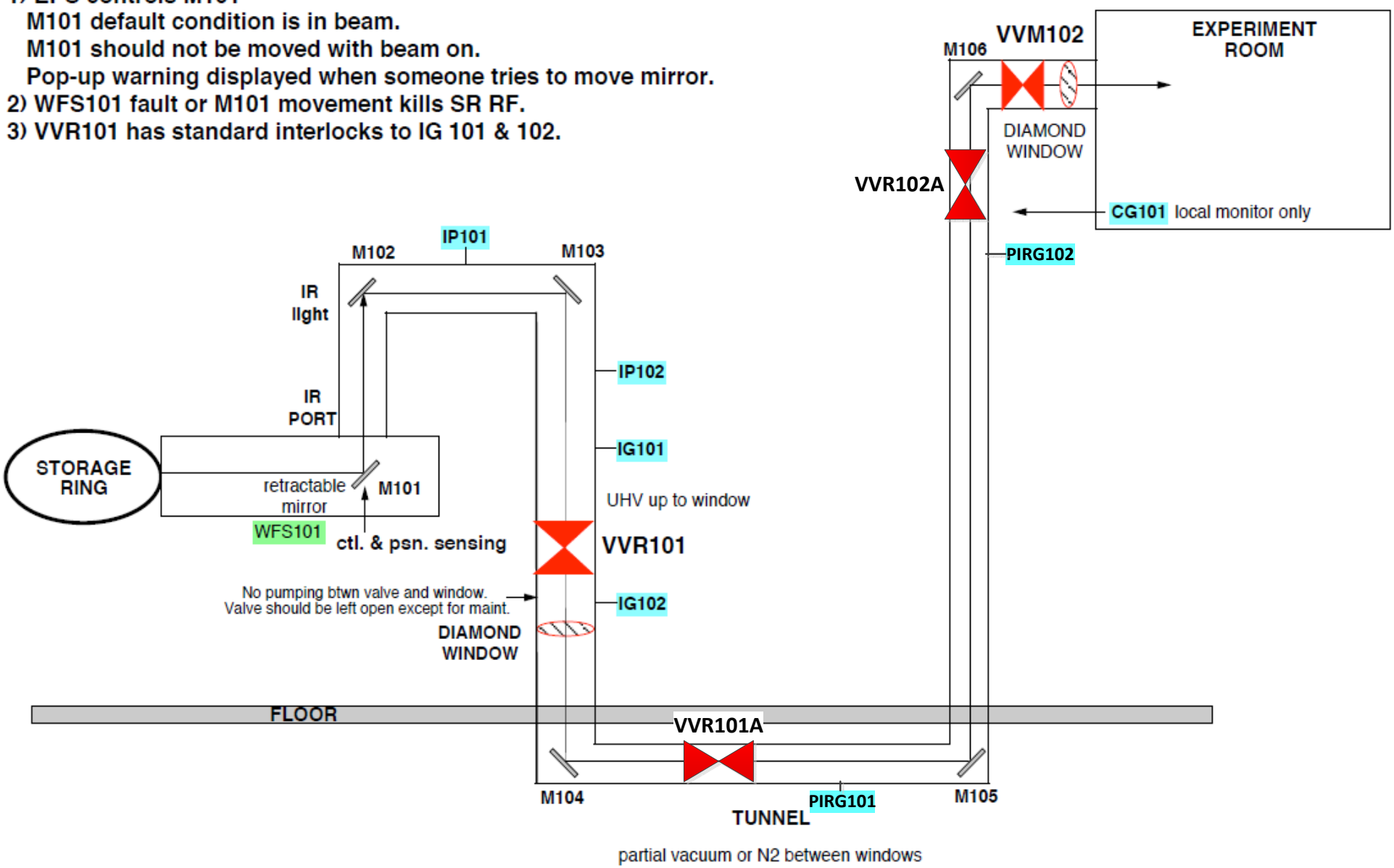

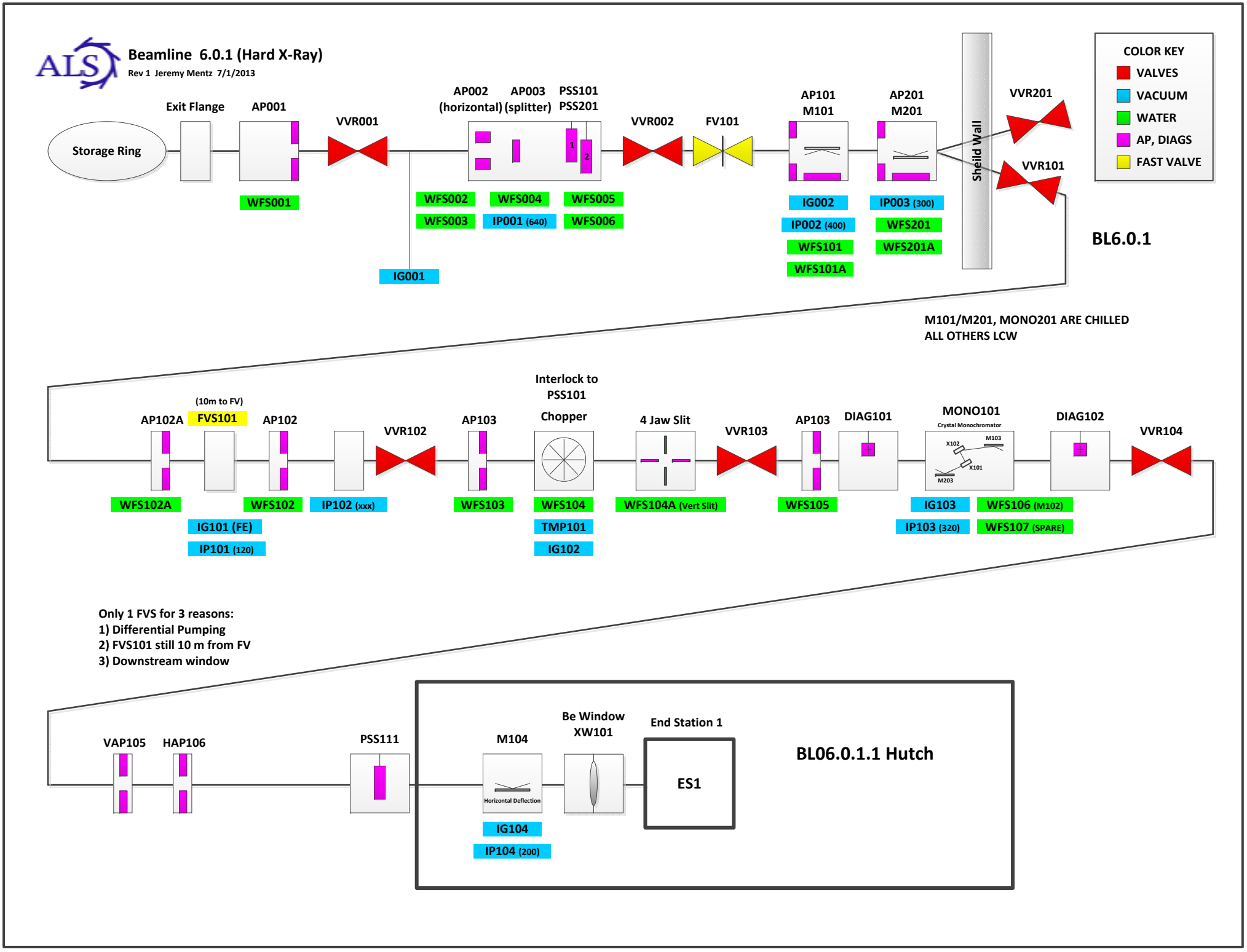
Beamline 6.0.1 (Hard X-Ray)
Rev 1 Jeremy Mentz 7/1/2013
Storage Ring
Exit Flange
AP001
WFS001
VVR001
AP002 (horizontal)
AP003 (splitter)
PSS101
PSS201
1
2
WFS002
WFS003
WFS004
IP001 (640)
WFS005
WFS006
IG001
VVR002
FV101
AP101
M101
IG002
IP002 (400)
WFS101
WFS101A
AP201
M201
IP003 (300)
WFS201
WFS201A
Sheild Wall
VVR201
VVR101
COLOR KEY
VALVES
VACUUM
WATER
AP, DIAGS
FAST VALVE
BL6.0.1
M101/M201, MONO201 ARE CHILLED
ALL OTHERS LCW
AP102A
(10m to FV)
FVS101
WFS102A
IG101 (FE)
IP101 (120)
AP102
WFS102
IP102 (xxx)
VVR102
AP103
WFS103
Interlock to PSS101
Chopper
WFS104
TMP101
IG102
4 Jaw Slit
WFS104A (Vert Slit)
VVR103
AP103
WFS105
DIAG101
MONO101
Crystal Monochromator
X102
M103
X101
M203
IG103
IP103 (320)
DIAG102
WFS106 (M102)
WFS107 (SPARE)
VVR104
Only 1 FVS for 3 reasons:
1) Differential Pumping
2) FVS101 still 10 m from FV
3) Downstream window
VAP105
HAP106
PSS111
M104
Horizontal Deflection
IG104
IP104 (200)
Be Window
XW101
End Station 1
ES1
BL06.0.1.1 Hutch

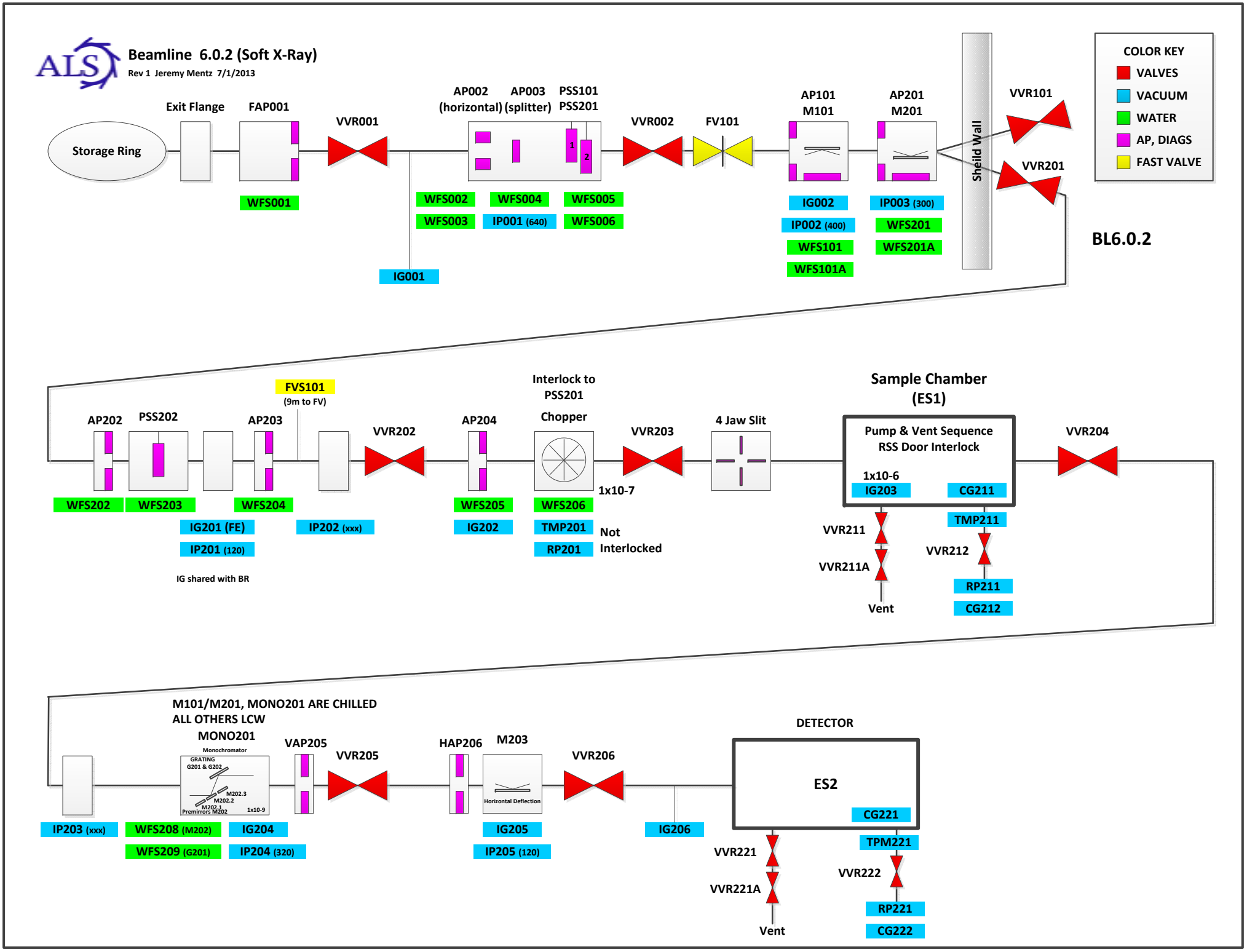
Beamline 6.0.2 (Soft X-Ray)
Rev 1 Jeremy Mentz 7/1/2013
Storage Ring
Exit Flange
FAP001
WFS001
VVR001
IG001
AP002 (horizontal)
AP003 (splitter)
PSS101
PSS201
WFS002
WFS003
WFS004
IP001 (640)
WFS005
WFS006
VVR002
FV101
AP101
M101
IG002
IP002 (400)
WFS101
WFS101A
AP201
M201
IP003 (300)
WFS201
WFS201A
Sheild Wall
VVR101
VVR201
COLOR KEY
VALVES
VACUUM
WATER
AP, DIAGS
FAST VALVE
BL6.0.2
AP202
PSS202
WFS202
WFS203
IG201 (FE)
IP201 (120)
IG shared with BR
AP203
WFS204
FVS101
(9m to FV)
IP202 (xxx)
VVR202
AP204
WFS205
IG202
Interlock to PSS201
Chopper
WFS206
TMP201
RP201
1x10-7
Not Interlocked
VVR203
4 Jaw Slit
Sample Chamber (ES1)
Pump & Vent Sequence
RSS Door Interlock
1x10-6
IG203
CG211
VVR211
VVR211A
Vent
TMP211
VVR212
RP211
CG212
VVR204
M101/M201, MONO201 ARE CHILLED
ALL OTHERS LCW
MONO201
Monochromator
GRATING
G201 & G202
M202.3
M202.2
M202.1
Premirrors M202
1x10-9
IP203 (xxx)
WFS208 (M202)
WFS209 (G201)
IG204
IP204 (320)
VAP205
VVR205
HAP206
M203
Horizontal Deflection
IG205
IP205 (120)
VVR206
IG206
DETECTOR
ES2
CG221
VVR221
VVR221A
Vent
TPM221
VVR222
RP221
CG222

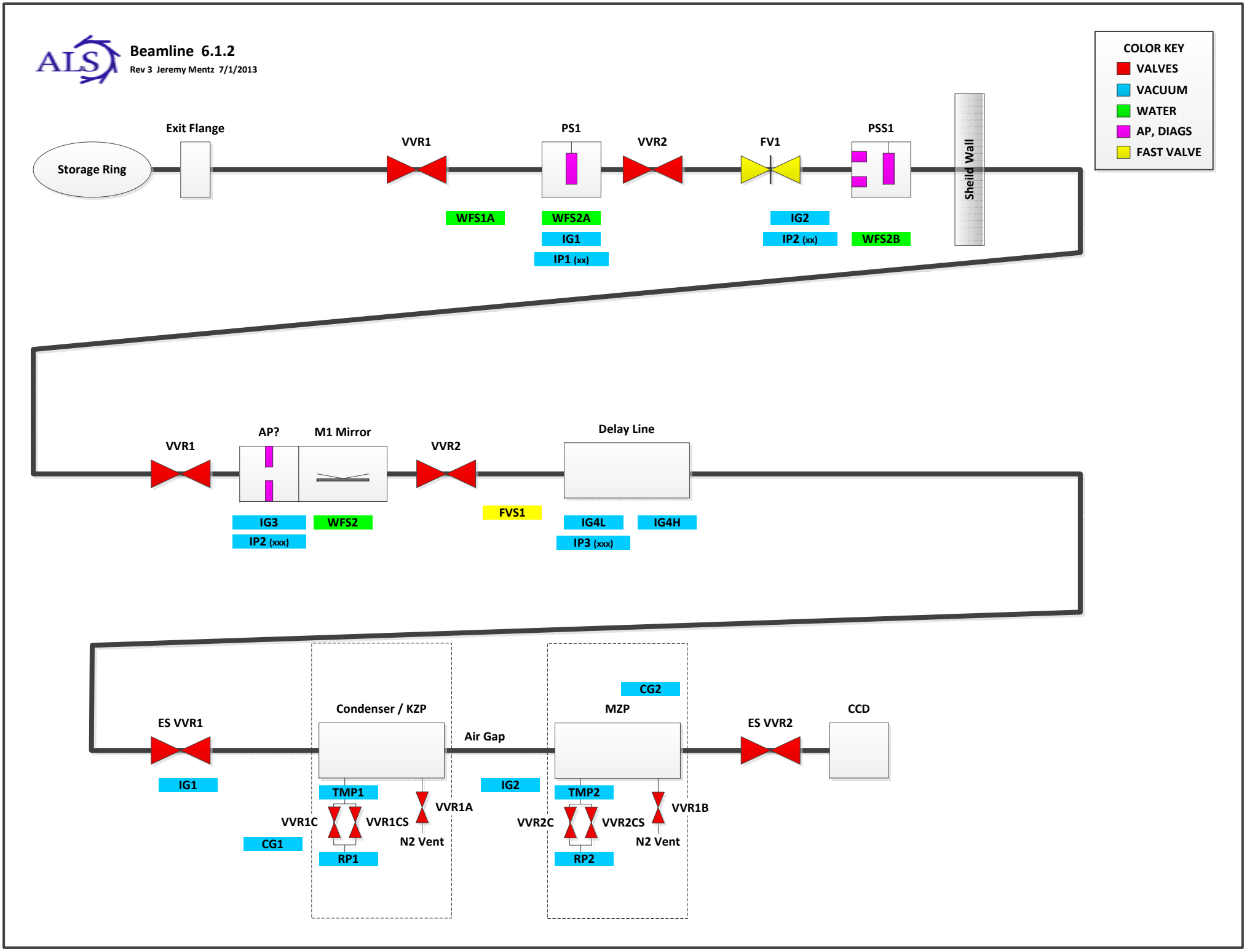
Beamline 6.1.2
Rev 3 Jeremy Mentz 7/1/2013
COLOR KEY
VALVES
VACUUM
WATER
AP, DIAGS
FAST VALVE
Storage Ring
Exit Flange
VVR1
PS1
VVR2
FV1
PSS1
Sheild Wall
WFS1A
WFS2A
IG1
IP1 (xx)
IG2
IP2 (xx)
WFS2B
VVR1
AP?
M1 Mirror
VVR2
Delay Line
IG3
IP2 (xxx)
WFS2
FVS1
IG4L
IP3 (xxx)
IG4H
ES VVR1
IG1
Condenser / KZP
TMP1
VVR1C
VVR1CS
VVR1A
N2 Vent
CG1
RP1
Air Gap
IG2
CG2
MZP
TMP2
VVR2C
VVR2CS
VVR1B
N2 Vent
RP2
ES VVR2
CCD

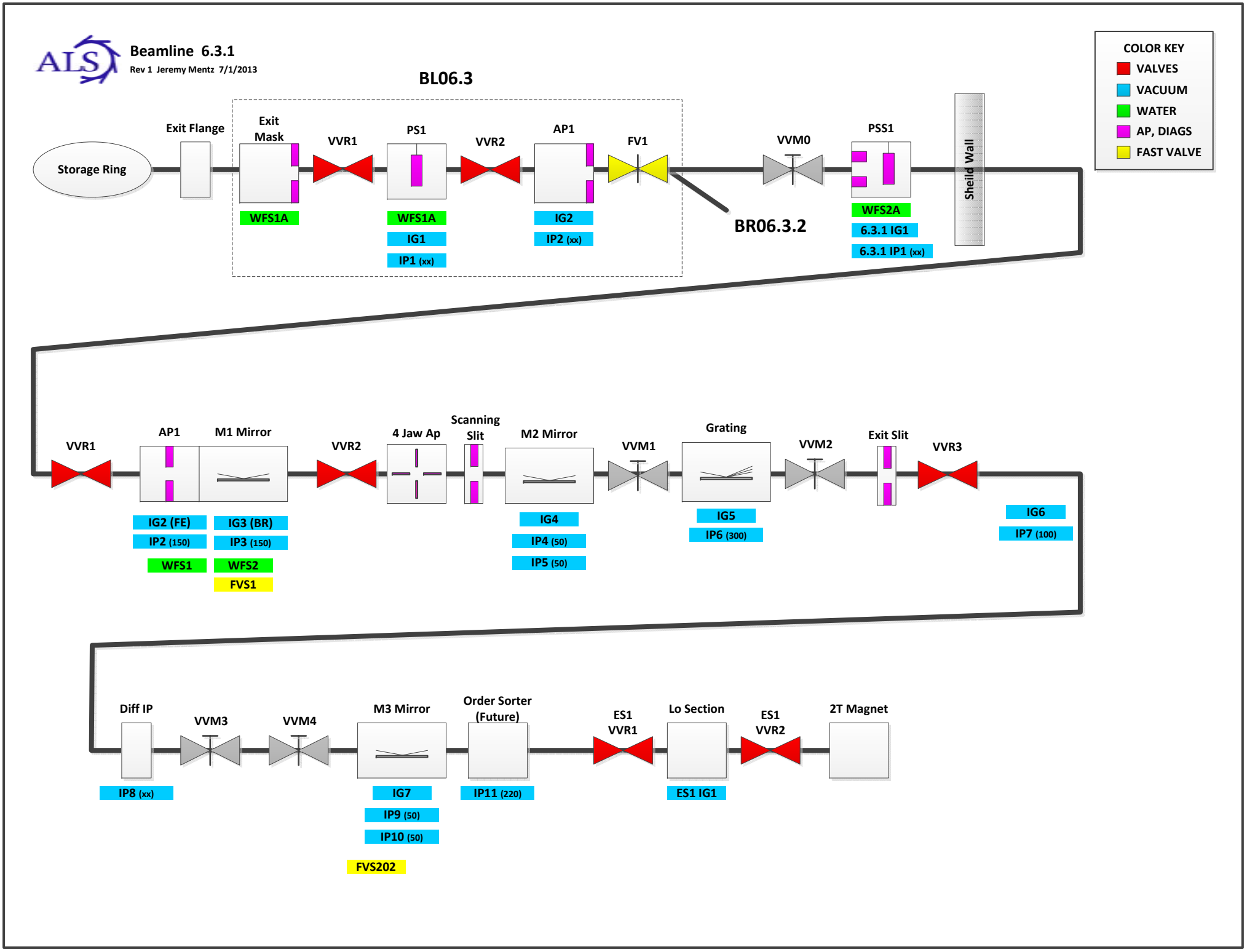
Beamline 6.3.1
Rev 1 Jeremy Mentz 7/1/2013
BL06.3
COLOR KEY
VALVES
VACUUM
WATER
AP, DIAGS
FAST VALVE
Storage Ring
Exit Flange
Exit Mask
VVR1
PS1
VVR2
AP1
FV1
VVM0
PSS1
Sheild Wall
WFS1A
WFS1A
IG1
IP1 (xx)
IG2
IP2 (xx)
BR06.3.2
WFS2A
6.3.1 IG1
6.3.1 IP1 (xx)
VVR1
AP1
M1 Mirror
VVR2
4 Jaw Ap
Scanning Slit
M2 Mirror
VVM1
Grating
VVM2
Exit Slit
VVR3
IG2 (FE)
IP2 (150)
WFS1
IG3 (BR)
IP3 (150)
WFS2
FVS1
IG4
IP4 (50)
IP5 (50)
IG5
IP6 (300)
IG6
IP7 (100)
Diff IP
VVM3
VVM4
M3 Mirror
Order Sorter (Future)
ES1 VVR1
Lo Section
ES1 VVR2
2T Magnet
IP8 (xx)
IG7
IP9 (50)
IP10 (50)
FVS202
IP11 (220)
ES1 IG1

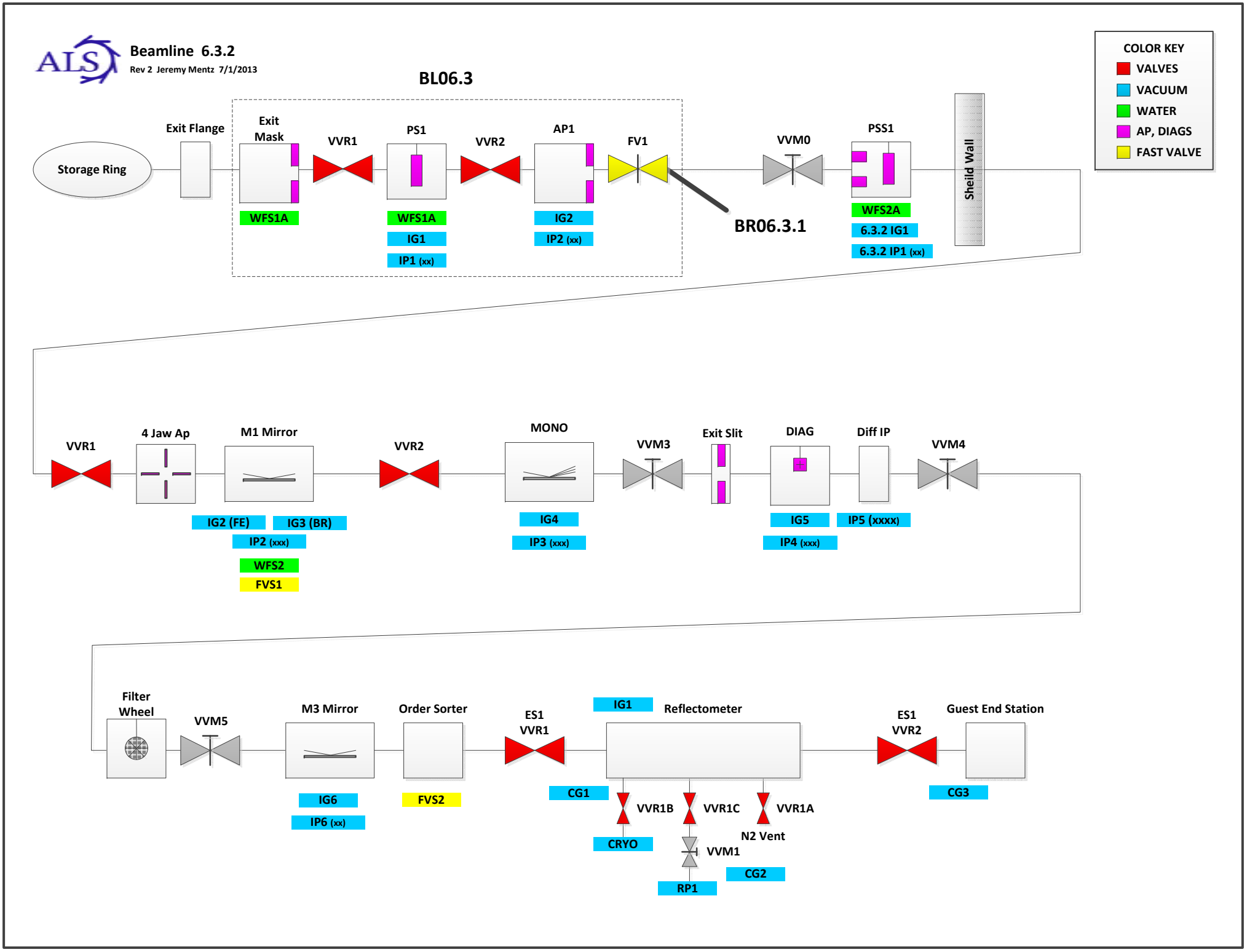
Beamline 6.3.2
Rev 2 Jeremy Mentz 7/1/2013
BL06.3
COLOR KEY
VALVES
VACUUM
WATER
AP, DIAGS
FAST VALVE
Storage Ring
Exit Flange
Exit Mask
VVR1
PS1
VVR2
AP1
FV1
VVM0
PSS1
Sheild Wall
WFS1A
WFS1A
IG1
IP1 (xx)
IG2
IP2 (xx)
BR06.3.1
WFS2A
6.3.2 IG1
6.3.2 IP1 (xx)
VVR1
4 Jaw Ap
M1 Mirror
VVR2
MONO
VVM3
Exit Slit
DIAG
Diff IP
VVM4
IG2 (FE)
IG3 (BR)
IP2 (xxx)
WFS2
FVS1
IG4
IP3 (xxx)
IG5
IP4 (xxx)
IP5 (xxxx)
Filter Wheel
VVM5
M3 Mirror
Order Sorter
ES1 VVR1
IG1
Reflectometer
ES1 VVR2
Guest End Station
IG6
IP6 (xx)
FVS2
CG1
VVR1B
VVR1C
VVR1A
CRYO
N2 Vent
VVM1
CG2
RP1
CG3

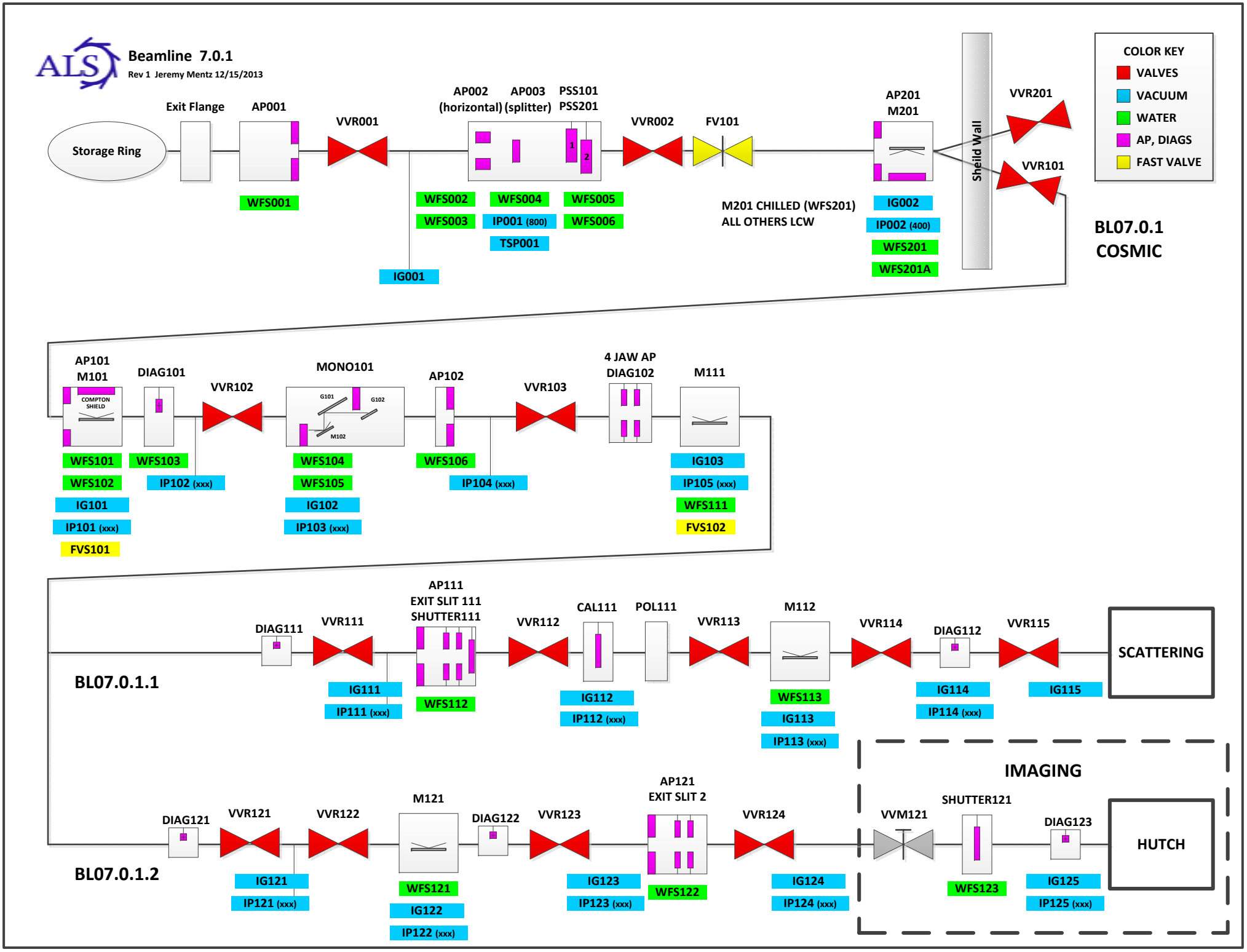
ALS
Beamline 7.0.1
Rev 1 Jeremy Mentz 12/15/2013
Storage Ring
Exit Flange
AP001
WFS001
VVR001
AP002 (horizontal)
AP003 (splitter)
PSS101
PSS201
WFS002
WFS003
WFS004
IP001 (800)
TSP001
WFS005
WFS006
IG001
VVR002
FV101
M201 CHILLED (WFS201)
ALL OTHERS LCW
AP201
M201
IG002
IP002 (400)
WFS201
WFS201A
Sheild Wall
VVR201
VVR101
COLOR KEY
VALVES
VACUUM
WATER
AP, DIAGS
FAST VALVE
BL07.0.1
COSMIC
AP101
M101
COMPTON SHIELD
WFS101
WFS102
IG101
IP101 (xxx)
FVS101
DIAG101
WFS103
IP102 (xxx)
VVR102
MONO101
G101
G102
M102
WFS104
WFS105
IG102
IP103 (xxx)
AP102
WFS106
IP104 (xxx)
VVR103
4 JAW AP
DIAG102
M111
IG103
IP105 (xxx)
WFS111
FVS102
BL07.0.1.1
DIAG111
VVR111
IG111
IP111 (xxx)
AP111
EXIT SLIT 111
SHUTTER111
WFS112
VVR112
CAL111
IG112
IP112 (xxx)
POL111
VVR113
M112
WFS113
IG113
IP113 (xxx)
VVR114
DIAG112
IG114
IP114 (xxx)
VVR115
IG115
SCATTERING
IMAGING
BL07.0.1.2
DIAG121
VVR121
IG121
IP121 (xxx)
VVR122
M121
WFS121
IG122
IP122 (xxx)
DIAG122
VVR123
IG123
IP123 (xxx)
AP121
EXIT SLIT 2
WFS122
VVR124
IG124
IP124 (xxx)
VVM121
SHUTTER121
WFS123
DIAG123
IG125
IP125 (xxx)
HUTCH

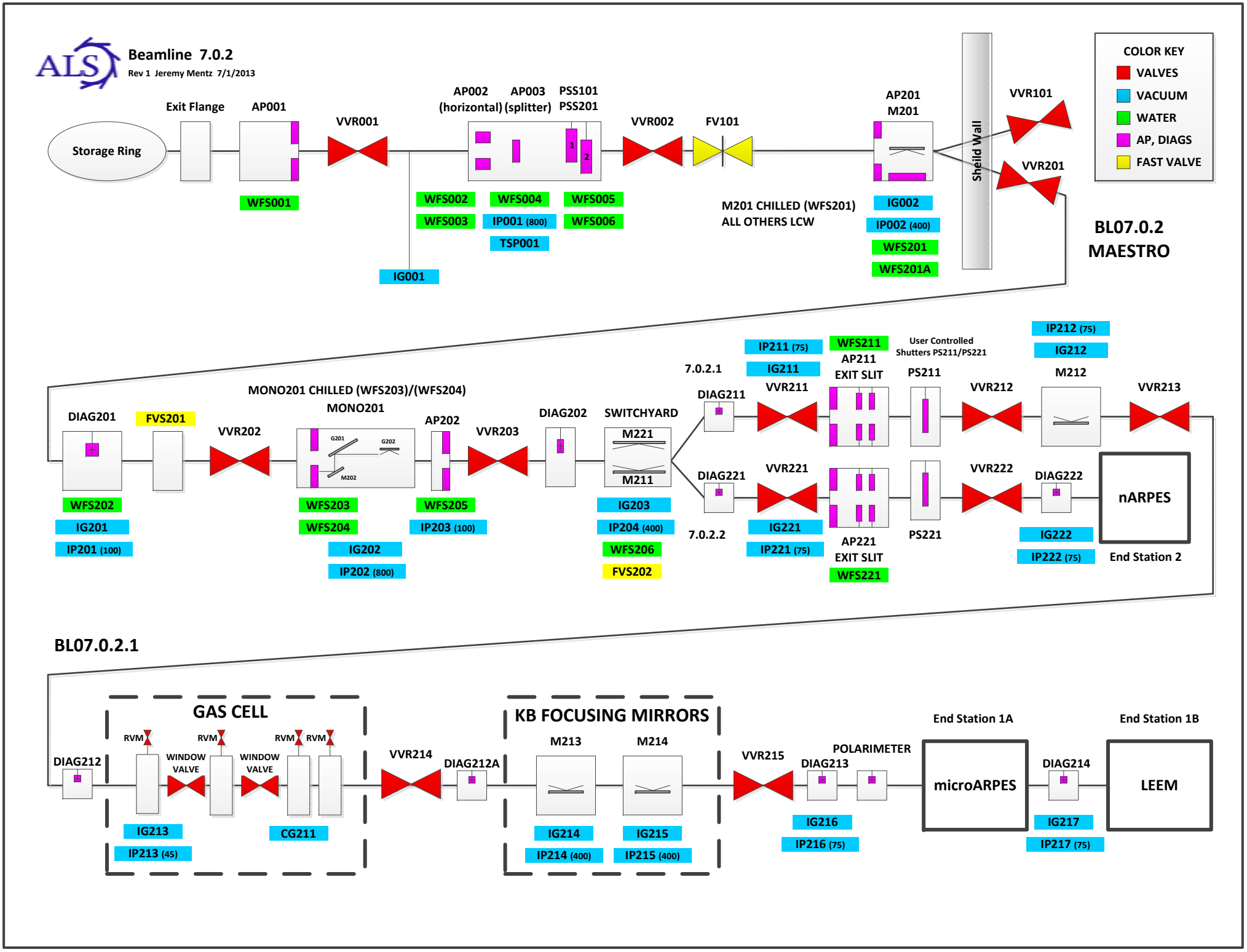
ALS
Beamline 7.0.2
Rev 1 Jeremy Mentz 7/1/2013
Storage Ring
Exit Flange
AP001
WFS001
VVR001
AP002 (horizontal)
AP003 (splitter)
PSS101
PSS201
WFS002
WFS003
WFS004
IP001 (800)
TSP001
WFS005
WFS006
IG001
VVR002
FV101
M201 CHILLED (WFS201)
ALL OTHERS LCW
AP201
M201
IG002
IP002 (400)
WFS201
WFS201A
Sheild Wall
VVR101
VVR201
COLOR KEY
VALVES
VACUUM
WATER
AP, DIAGS
FAST VALVE
BL07.0.2
MAESTRO
DIAG201
WFS202
IG201
IP201 (100)
FVS201
VVR202
MONO201 CHILLED (WFS203)/(WFS204)
MONO201
G201
G202
M202
WFS203
WFS204
IG202
IP202 (800)
AP202
WFS205
IP203 (100)
VVR203
DIAG202
SWITCHYARD
M221
M211
IG203
IP204 (400)
WFS206
FVS202
7.0.2.1
DIAG211
IP211 (75)
IG211
VVR211
WFS211
AP211
EXIT SLIT
User Controlled
Shutters PS211/PS221
PS211
VVR212
IP212 (75)
IG212
M212
VVR213
DIAG221
VVR221
IG221
IP221 (75)
7.0.2.2
AP221
EXIT SLIT
WFS221
PS221
VVR222
DIAG222
IG222
IP222 (75)
nARPES
End Station 2
BL07.0.2.1
GAS CELL
RVM
WINDOW VALVE
DIAG212
IG213
IP213 (45)
CG211
VVR214
DIAG212A
KB FOCUSING MIRRORS
M213
M214
IG214
IP214 (400)
IG215
IP215 (400)
VVR215
POLARIMETER
DIAG213
IG216
IP216 (75)
End Station 1A
microARPES
DIAG214
IG217
IP217 (75)
End Station 1B
LEEM

Beamline 7.2 (Diagnostic)

Rev 1 Jeremy Mentz 7/1/2013

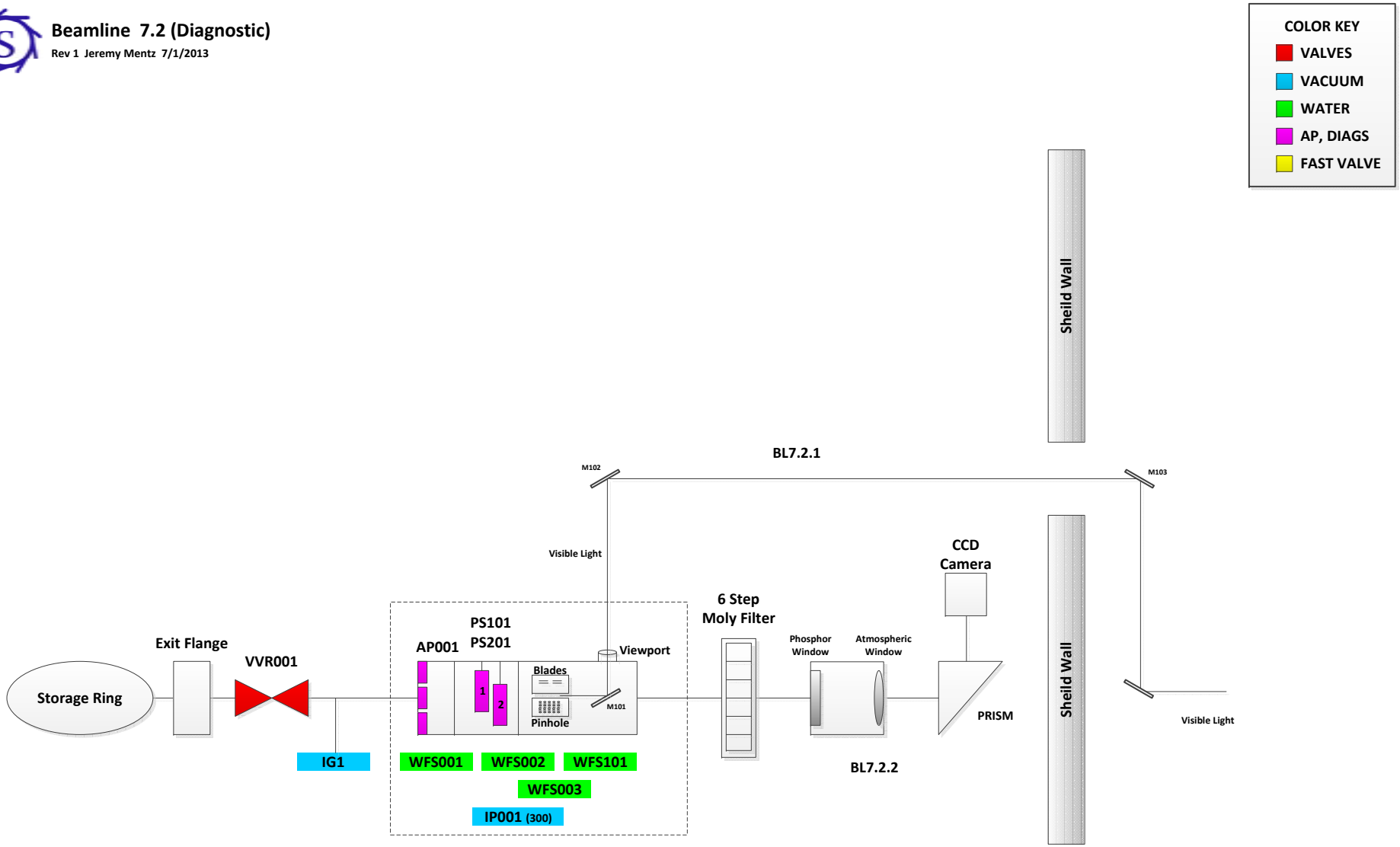

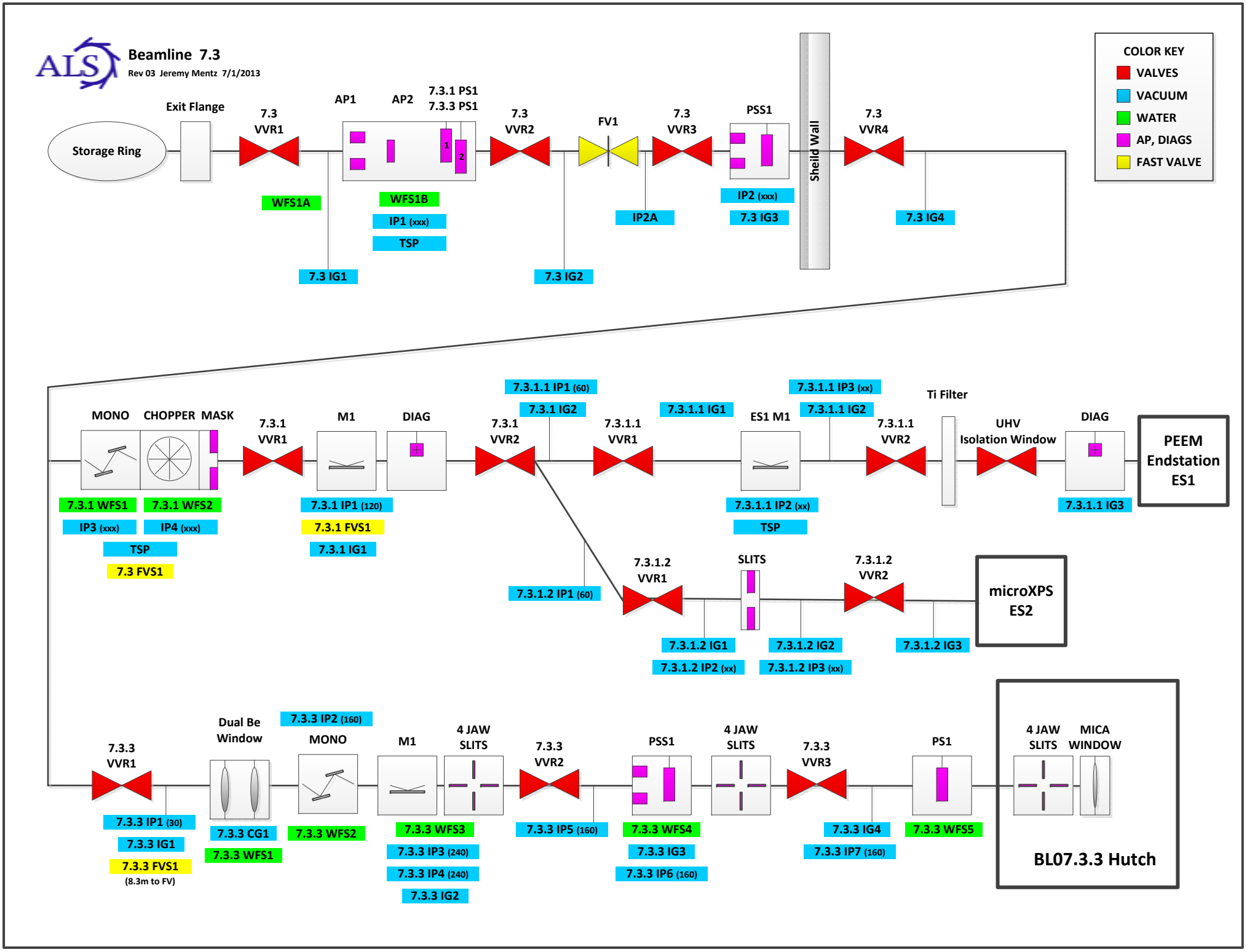
ALS
Beamline 7.3
Rev 03 Jeremy Mentz 7/1/2013
COLOR KEY
VALVES
VACUUM
WATER
AP, DIAGS
FAST VALVE
Storage Ring
Exit Flange
7.3 VVR1
WFS1A
7.3 IG1
AP1
AP2
7.3.1 PS1
7.3.3 PS1
WFS1B
IP1 (xxx)
TSP
7.3 VVR2
7.3 IG2
FV1
IP2A
7.3 VVR3
PSS1
IP2 (xxx)
7.3 IG3
Sheild Wall
7.3 VVR4
7.3 IG4
MONO
CHOPPER
MASK
7.3.1 WFS1
7.3.1 WFS2
IP3 (xxx)
IP4 (xxx)
TSP
7.3 FVS1
7.3.1 VVR1
M1
DIAG
7.3.1 IP1 (120)
7.3.1 FVS1
7.3.1 IG1
7.3.1.1 IP1 (60)
7.3.1 IG2
7.3.1 VVR2
7.3.1.1 VVR1
7.3.1.1 IG1
ES1 M1
7.3.1.1 IP2 (xx)
TSP
7.3.1.1 IP3 (xx)
7.3.1.1 IG2
7.3.1.1 VVR2
Ti Filter
UHV Isolation Window
DIAG
7.3.1.1 IG3
PEEM Endstation ES1
7.3.1.2 IP1 (60)
7.3.1.2 VVR1
SLITS
7.3.1.2 VVR2
microXPS ES2
7.3.1.2 IG1
7.3.1.2 IP2 (xx)
7.3.1.2 IG2
7.3.1.2 IP3 (xx)
7.3.1.2 IG3
7.3.3 VVR1
7.3.3 IP1 (30)
7.3.3 IG1
7.3.3 FVS1
(8.3m to FV)
Dual Be Window
7.3.3 CG1
7.3.3 WFS1
7.3.3 IP2 (160)
MONO
7.3.3 WFS2
M1
7.3.3 WFS3
7.3.3 IP3 (240)
7.3.3 IP4 (240)
7.3.3 IG2
4 JAW SLITS
7.3.3 VVR2
7.3.3 IP5 (160)
PSS1
7.3.3 WFS4
7.3.3 IG3
7.3.3 IP6 (160)
4 JAW SLITS
7.3.3 VVR3
7.3.3 IG4
7.3.3 IP7 (160)
PS1
7.3.3 WFS5
4 JAW SLITS
MICA WINDOW
BL07.3.3 Hutch

Beamline 8.0.1

Rev 1 Jeremy Mentz 7/1/2013

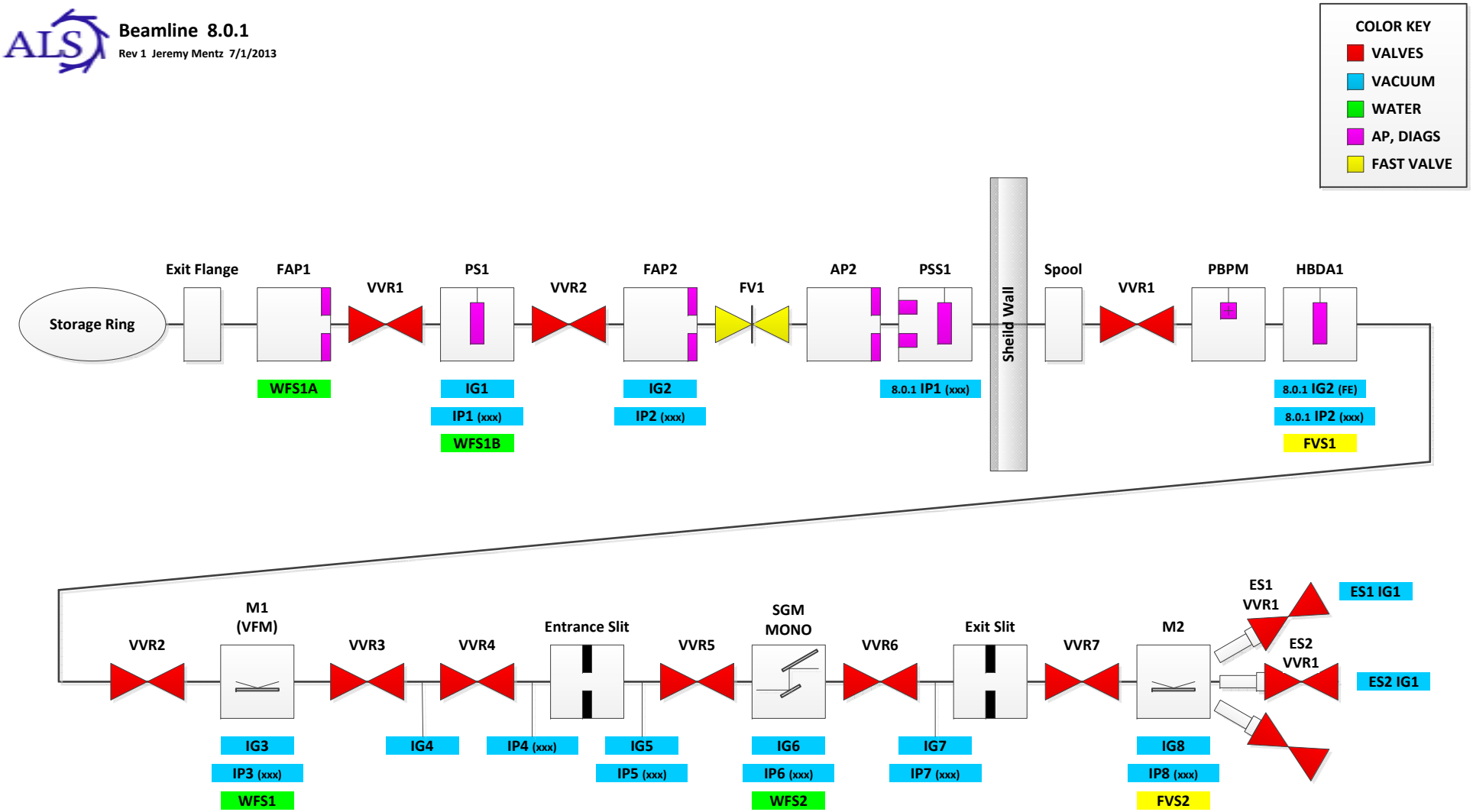

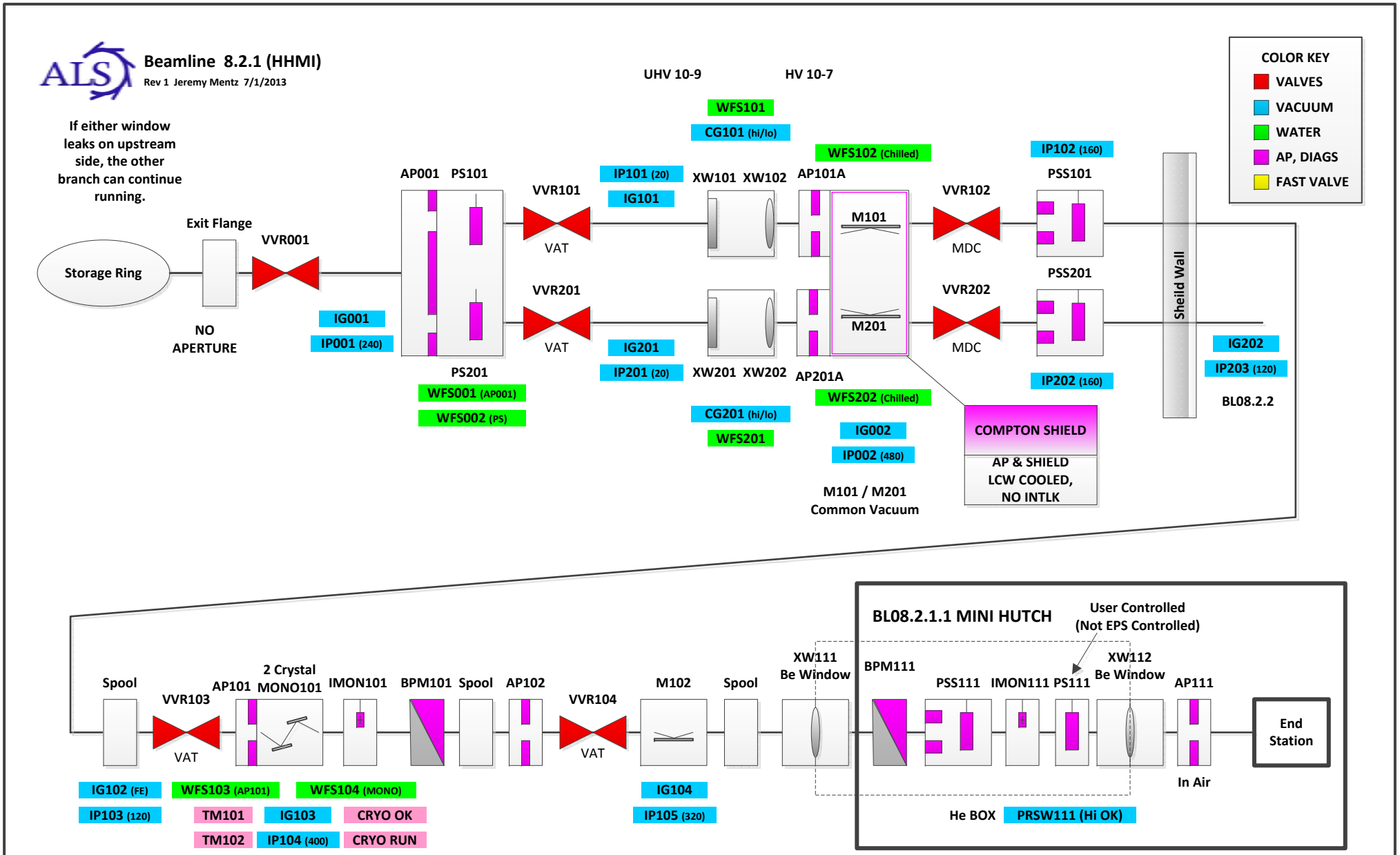
Beamline 8.2.1 (HHMI)
Rev 1 Jeremy Mentz 7/1/2013
If either window leaks on upstream side, the other branch can continue running.
COLOR KEY
VALVES
VACUUM
WATER
AP, DIAGS
FAST VALVE
UHV 10-9
HV 10-7
Storage Ring
Exit Flange
NO APERTURE
VVR001
IG001
IP001 (240)
AP001
PS101
PS201
WFS001 (AP001)
WFS002 (PS)
VVR101
VAT
VVR201
VAT
IP101 (20)
IG101
IG201
IP201 (20)
WFS101
CG101 (hi/lo)
XW101
XW102
XW201
XW202
CG201 (hi/lo)
WFS201
AP101A
AP201A
WFS102 (Chilled)
WFS202 (Chilled)
IG002
IP002 (480)
M101
M201
M101 / M201 Common Vacuum
VVR102
VVR202
MDC
MDC
IP102 (160)
PSS101
PSS201
IP202 (160)
COMPTON SHIELD
AP & SHIELD LCW COOLED, NO INTLK
Sheild Wall
IG202
IP203 (120)
BL08.2.2
Spool
VVR103
VAT
IG102 (FE)
IP103 (120)
AP101
2 Crystal MONO101
WFS103 (AP101)
TM101
TM102
IG103
IP104 (400)
WFS104 (MONO)
CRYO OK
CRYO RUN
IMON101
BPM101
Spool
AP102
VVR104
VAT
M102
IG104
IP105 (320)
Spool
XW111 Be Window
BL08.2.1.1 MINI HUTCH
User Controlled (Not EPS Controlled)
BPM111
PSS111
IMON111
PS111
XW112 Be Window
AP111
In Air
He BOX
PRSW111 (Hi OK)
End Station

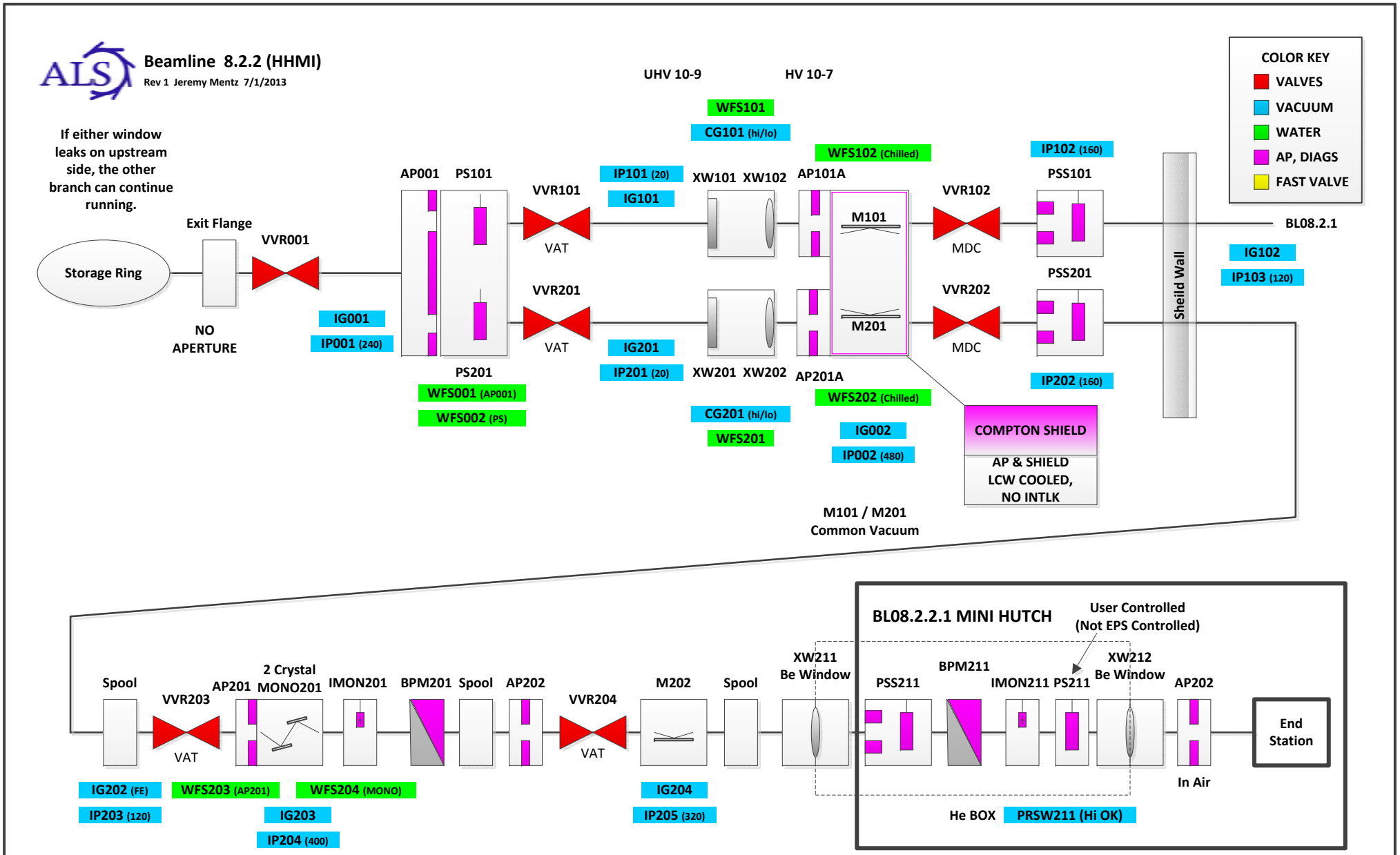
Beamline 8.2.2 (HHMI)
Rev 1 Jeremy Mentz 7/1/2013
If either window leaks on upstream side, the other branch can continue running.
Storage Ring
Exit Flange
NO APERTURE
VVR001
IG001
IP001 (240)
AP001
PS101
PS201
WFS001 (AP001)
WFS002 (PS)
VVR101
VAT
VVR201
VAT
IP101 (20)
IG101
IG201
IP201 (20)
UHV 10-9
HV 10-7
WFS101
CG101 (hi/lo)
XW101 XW102
XW201 XW202
CG201 (hi/lo)
WFS201
WFS102 (Chilled)
AP101A
M101
M201
AP201A
WFS202 (Chilled)
IG002
IP002 (480)
M101 / M201
Common Vacuum
VVR102
MDC
VVR202
MDC
IP102 (160)
PSS101
PSS201
IP202 (160)
COMPTON SHIELD
AP & SHIELD
LCW COOLED,
NO INTLK
Sheild Wall
BL08.2.1
IG102
IP103 (120)
COLOR KEY
VALVES
VACUUM
WATER
AP, DIAGS
FAST VALVE
Spool
VVR203
VAT
AP201
2 Crystal
MONO201
IMON201
BPM201
Spool
AP202
VVR204
VAT
M202
Spool
XW211
Be Window
IG202 (FE)
IP203 (120)
WFS203 (AP201)
WFS204 (MONO)
IG203
IP204 (400)
IG204
IP205 (320)
BL08.2.2.1 MINI HUTCH
User Controlled
(Not EPS Controlled)
PSS211
BPM211
IMON211
PS211
XW212
Be Window
AP202
In Air
He BOX
PRSW211 (Hi OK)
End Station

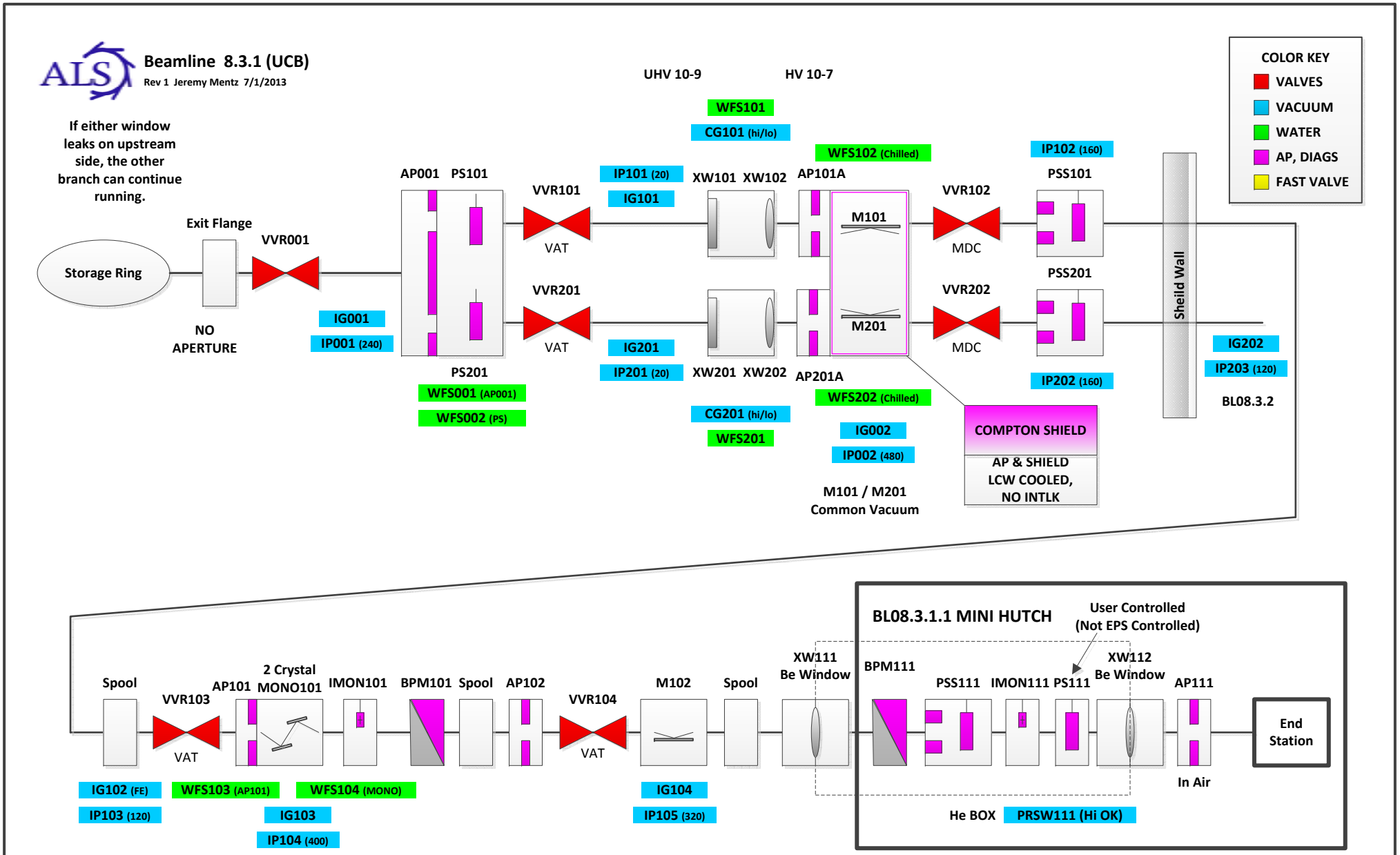
Beamline 8.3.1 (UCB)
Rev 1 Jeremy Mentz 7/1/2013
If either window leaks on upstream side, the other branch can continue running.
COLOR KEY
VALVES
VACUUM
WATER
AP, DIAGS
FAST VALVE
UHV 10-9
HV 10-7
Storage Ring
Exit Flange
VVR001
NO APERTURE
IG001
IP001 (240)
AP001
PS101
PS201
WFS001 (AP001)
WFS002 (PS)
VVR101
VAT
VVR201
VAT
IP101 (20)
IG101
IG201
IP201 (20)
WFS101
CG101 (hi/lo)
XW101
XW102
XW201
XW202
CG201 (hi/lo)
WFS201
AP101A
AP201A
WFS102 (Chilled)
WFS202 (Chilled)
IG002
IP002 (480)
M101
M201
M101 / M201 Common Vacuum
VVR102
VVR202
MDC
MDC
IP102 (160)
PSS101
PSS201
IP202 (160)
COMPTON SHIELD
AP & SHIELD LCW COOLED, NO INTLK
Sheild Wall
IG202
IP203 (120)
BL08.3.2
Spool
VVR103
VAT
IG102 (FE)
IP103 (120)
AP101
2 Crystal MONO101
WFS103 (AP101)
WFS104 (MONO)
IG103
IP104 (400)
IMON101
BPM101
Spool
AP102
VVR104
VAT
M102
IG104
IP105 (320)
Spool
XW111 Be Window
BL08.3.1.1 MINI HUTCH
User Controlled (Not EPS Controlled)
BPM111
PSS111
IMON111
PS111
XW112 Be Window
AP111
In Air
He BOX
PRSW111 (Hi OK)
End Station

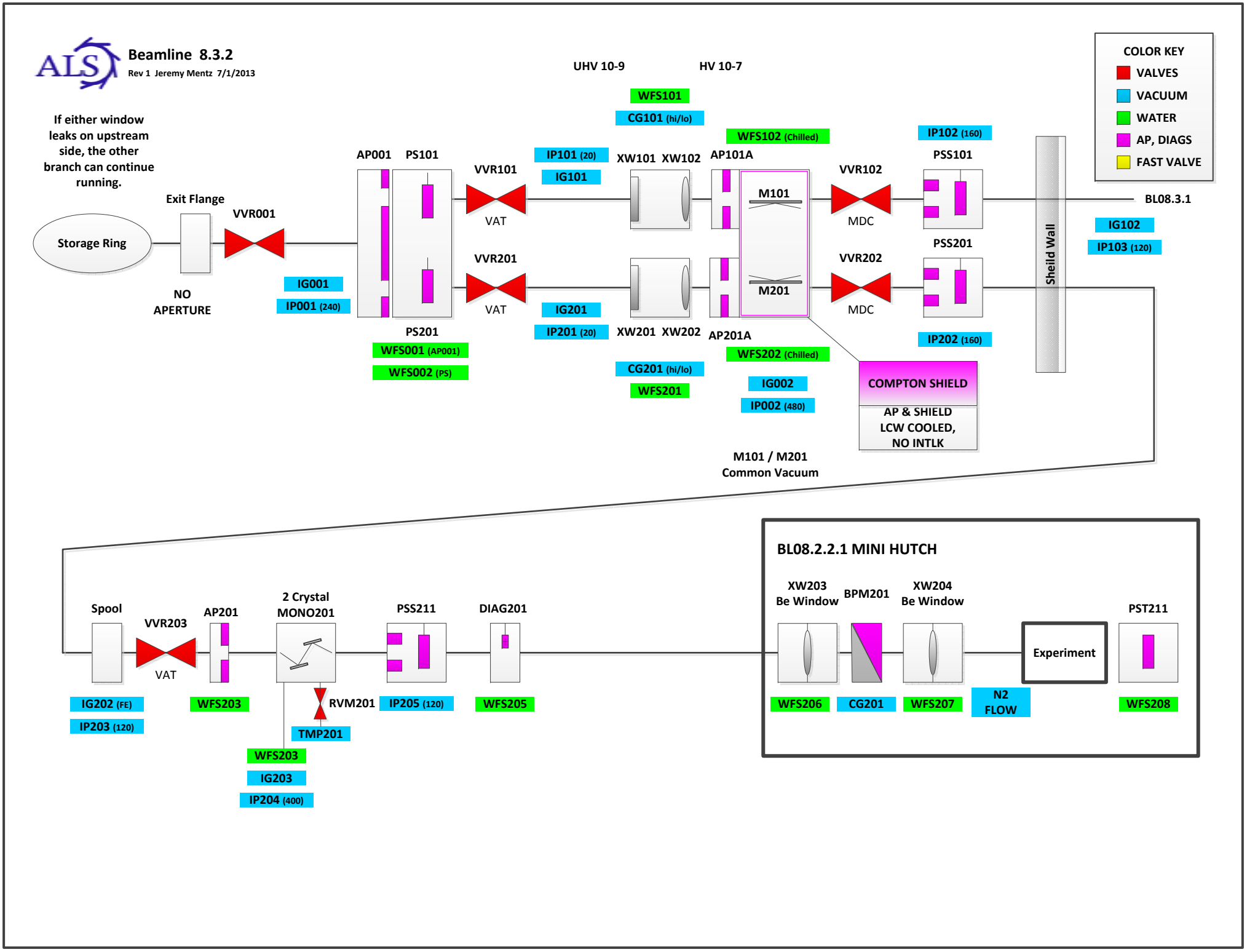
Beamline 8.3.2
Rev 1 Jeremy Mentz 7/1/2013
COLOR KEY
VALVES
VACUUM
WATER
AP, DIAGS
FAST VALVE
UHV 10-9
HV 10-7
If either window leaks on upstream side, the other branch can continue running.
Storage Ring
Exit Flange
VVR001
NO APERTURE
IG001
IP001 (240)
AP001
PS101
PS201
WFS001 (AP001)
WFS002 (PS)
VVR101
VAT
VVR201
VAT
IP101 (20)
IG101
IG201
IP201 (20)
WFS101
CG101 (hi/lo)
XW101 XW102
XW201 XW202
CG201 (hi/lo)
WFS201
AP101A
AP201A
WFS102 (Chilled)
WFS202 (Chilled)
IG002
IP002 (480)
M101
M201
M101 / M201
Common Vacuum
VVR102
MDC
VVR202
MDC
IP102 (160)
PSS101
PSS201
IP202 (160)
COMPTON SHIELD
AP & SHIELD
LCW COOLED,
NO INTLK
Sheild Wall
BL08.3.1
IG102
IP103 (120)
Spool
VVR203
VAT
AP201
2 Crystal
MONO201
PSS211
DIAG201
IG202 (FE)
IP203 (120)
WFS203
RVM201
TMP201
IP205 (120)
WFS205
WFS203
IG203
IP204 (400)
BL08.2.2.1 MINI HUTCH
XW203
Be Window
BPM201
XW204
Be Window
PST211
Experiment
WFS206
CG201
WFS207
N2
FLOW
WFS208

Beamline 9.0.1

Rev 09 Jeremy Mentz 10/3/2013

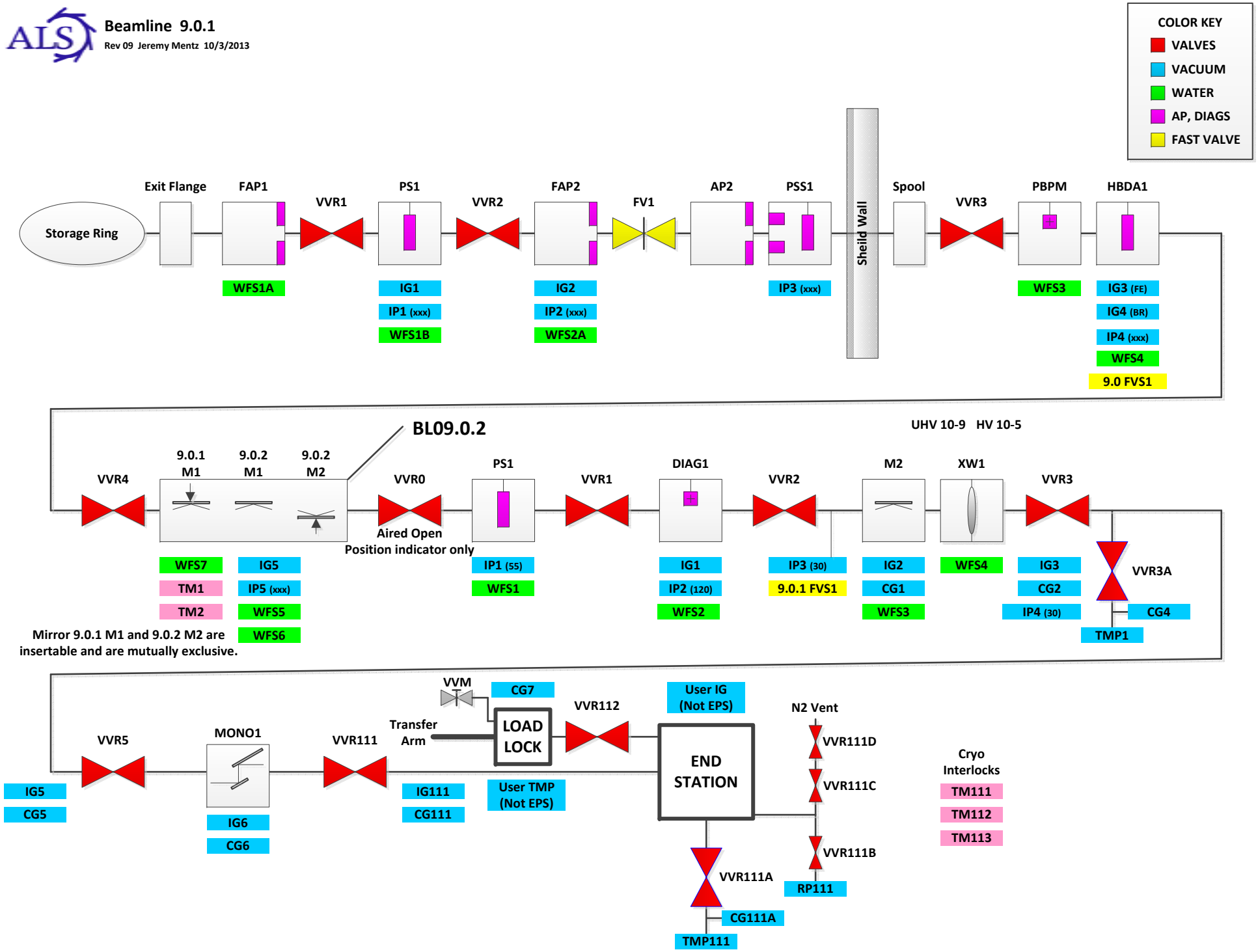

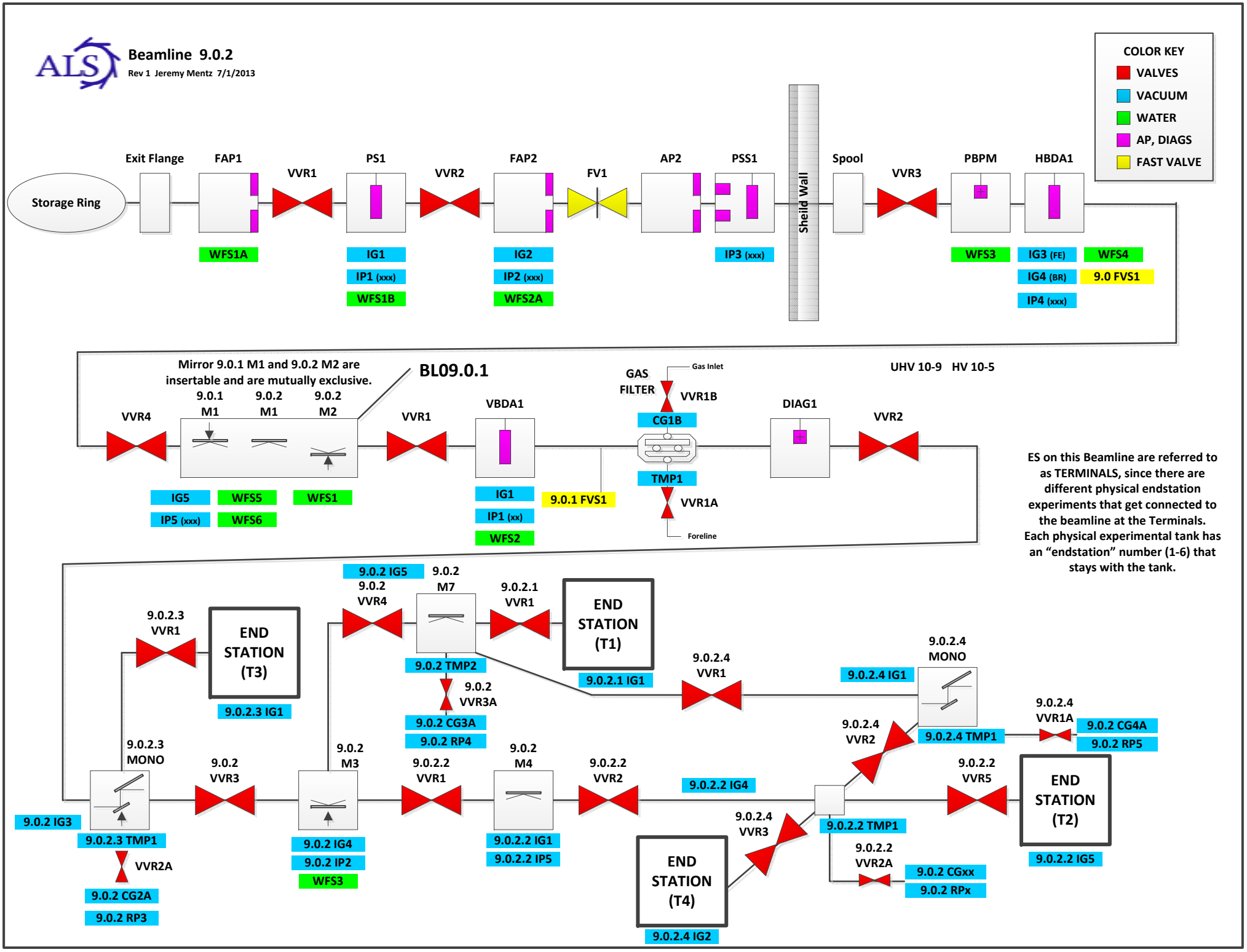
ALS
Beamline 9.0.2
Rev 1 Jeremy Mentz 7/1/2013
COLOR KEY
VALVES
VACUUM
WATER
AP, DIAGS
FAST VALVE
Storage Ring
Exit Flange
FAP1
VVR1
PS1
VVR2
FAP2
FV1
AP2
PSS1
Sheild Wall
Spool
VVR3
PBPM
HBDA1
WFS1A
IG1
IP1 (xxx)
WFS1B
IG2
IP2 (xxx)
WFS2A
IP3 (xxx)
WFS3
IG3 (FE)
IG4 (BR)
IP4 (xxx)
WFS4
9.0 FVS1
Mirror 9.0.1 M1 and 9.0.2 M2 are insertable and are mutually exclusive.
BL09.0.1
UHV 10-9 HV 10-5
VVR4
9.0.1 M1
9.0.2 M1
9.0.2 M2
VVR1
VBDA1
GAS FILTER
Gas Inlet
VVR1B
CG1B
DIAG1
VVR2
IG5
IP5 (xxx)
WFS5
WFS6
WFS1
IG1
IP1 (xx)
WFS2
9.0.1 FVS1
TMP1
VVR1A
Foreline
ES on this Beamline are referred to as TERMINALS, since there are different physical endstation experiments that get connected to the beamline at the Terminals. Each physical experimental tank has an "endstation" number (1-6) that stays with the tank.
9.0.2 IG5
9.0.2 VVR4
9.0.2 M7
9.0.2.1 VVR1
END STATION (T1)
9.0.2.1 IG1
9.0.2.3 VVR1
END STATION (T3)
9.0.2.3 IG1
9.0.2 TMP2
9.0.2 VVR3A
9.0.2 CG3A
9.0.2 RP4
9.0.2.4 VVR1
9.0.2.4 MONO
9.0.2.4 IG1
9.0.2.4 TMP1
9.0.2.4 VVR1A
9.0.2 CG4A
9.0.2 RP5
9.0.2.4 VVR2
9.0.2.3 MONO
9.0.2 VVR3
9.0.2 M3
9.0.2.2 VVR1
9.0.2 M4
9.0.2.2 VVR2
9.0.2.2 IG4
9.0.2.2 VVR5
END STATION (T2)
9.0.2.2 IG5
9.0.2 IG3
9.0.2.3 TMP1
VVR2A
9.0.2 CG2A
9.0.2 RP3
9.0.2 IG4
9.0.2 IP2
WFS3
9.0.2.2 IG1
9.0.2.2 IP5
9.0.2.4 VVR3
END STATION (T4)
9.0.2.4 IG2
9.0.2.2 TMP1
9.0.2.2 VVR2A
9.0.2 CGxx
9.0.2 RPx

Beamline 9.3.1

Rev 5 Jeremy Mentz 7/1/2013

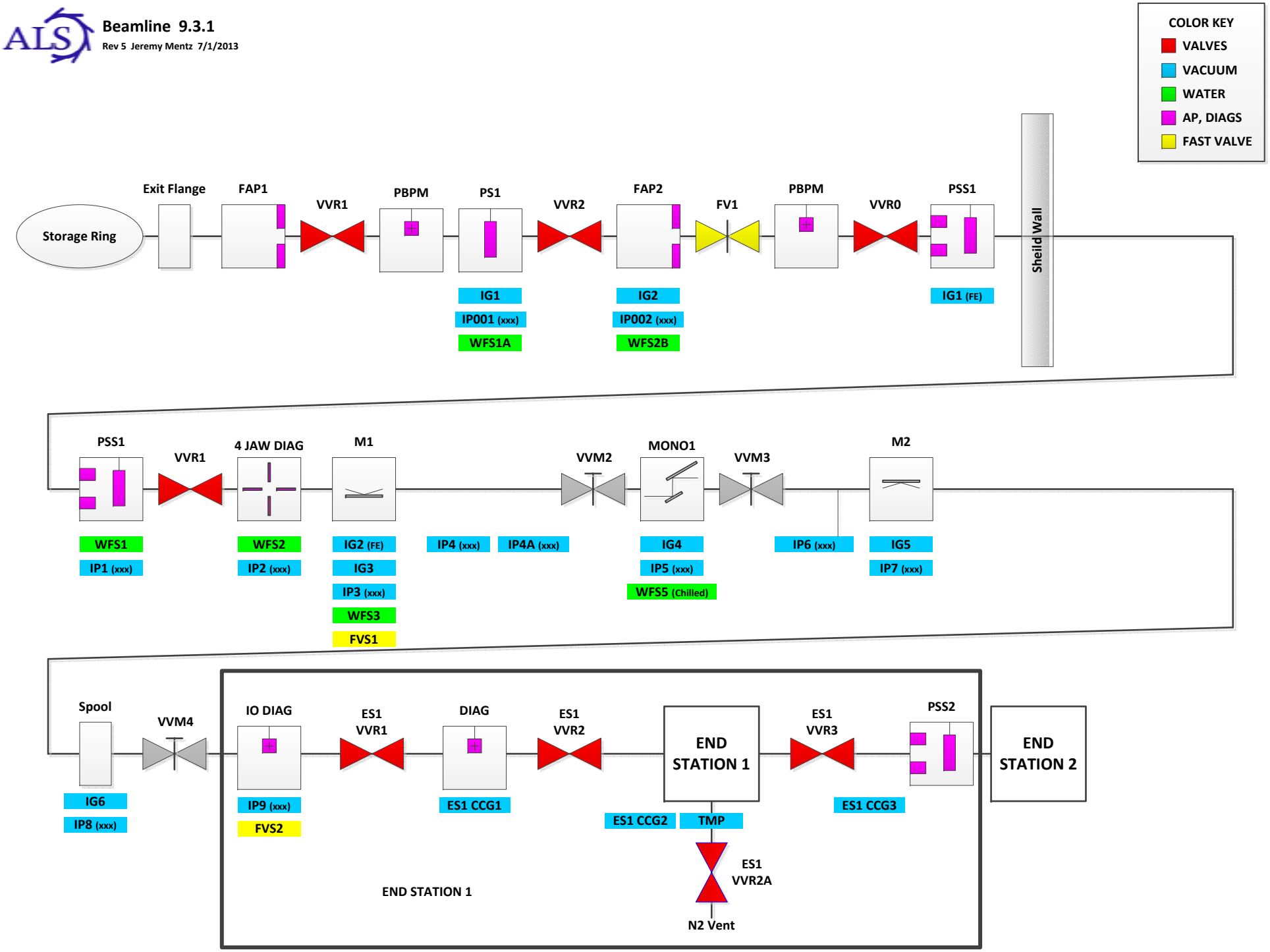

Beamline 9.3.2

Rev 1 Jeremy Mentz 7/1/2013

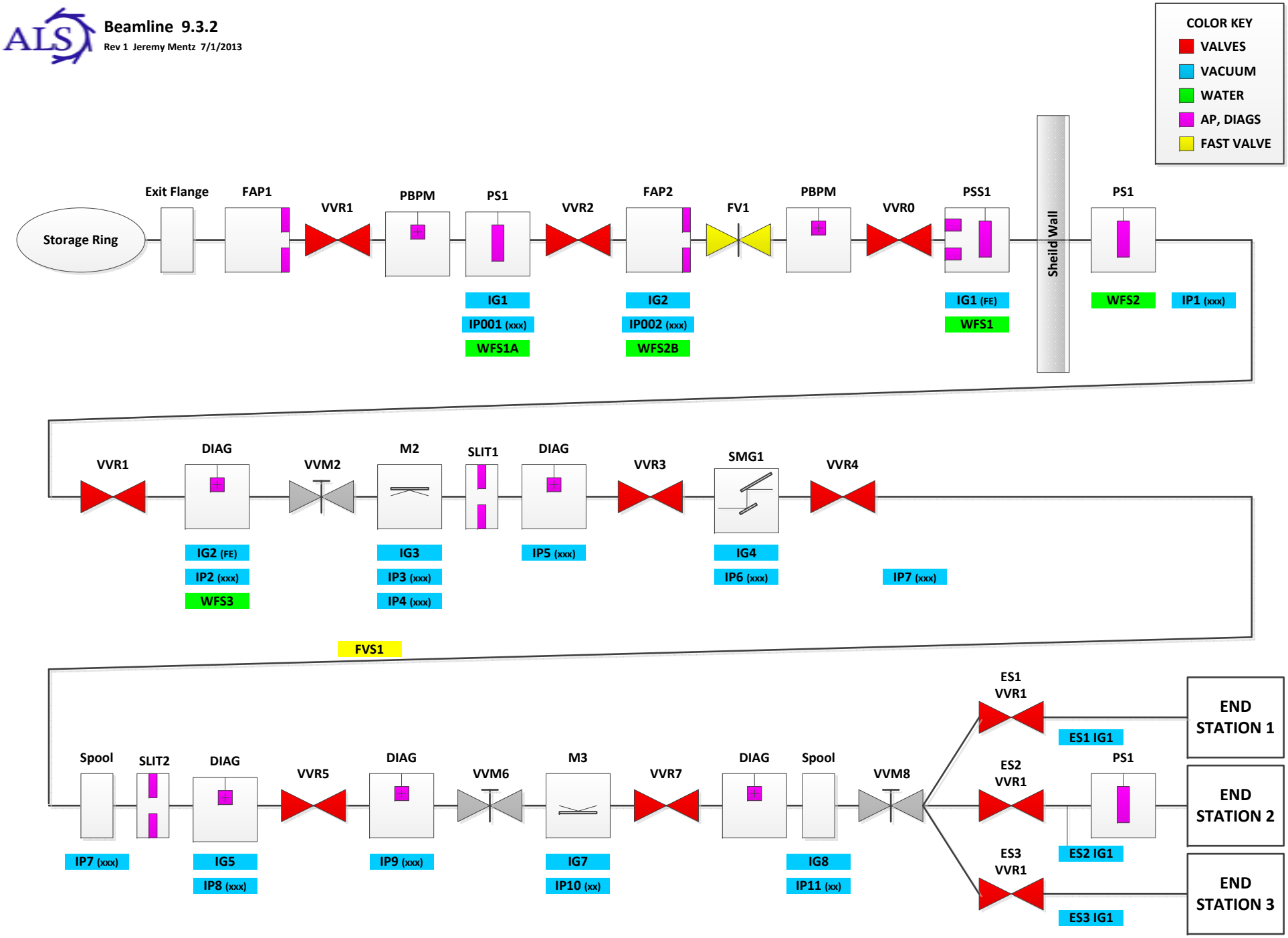

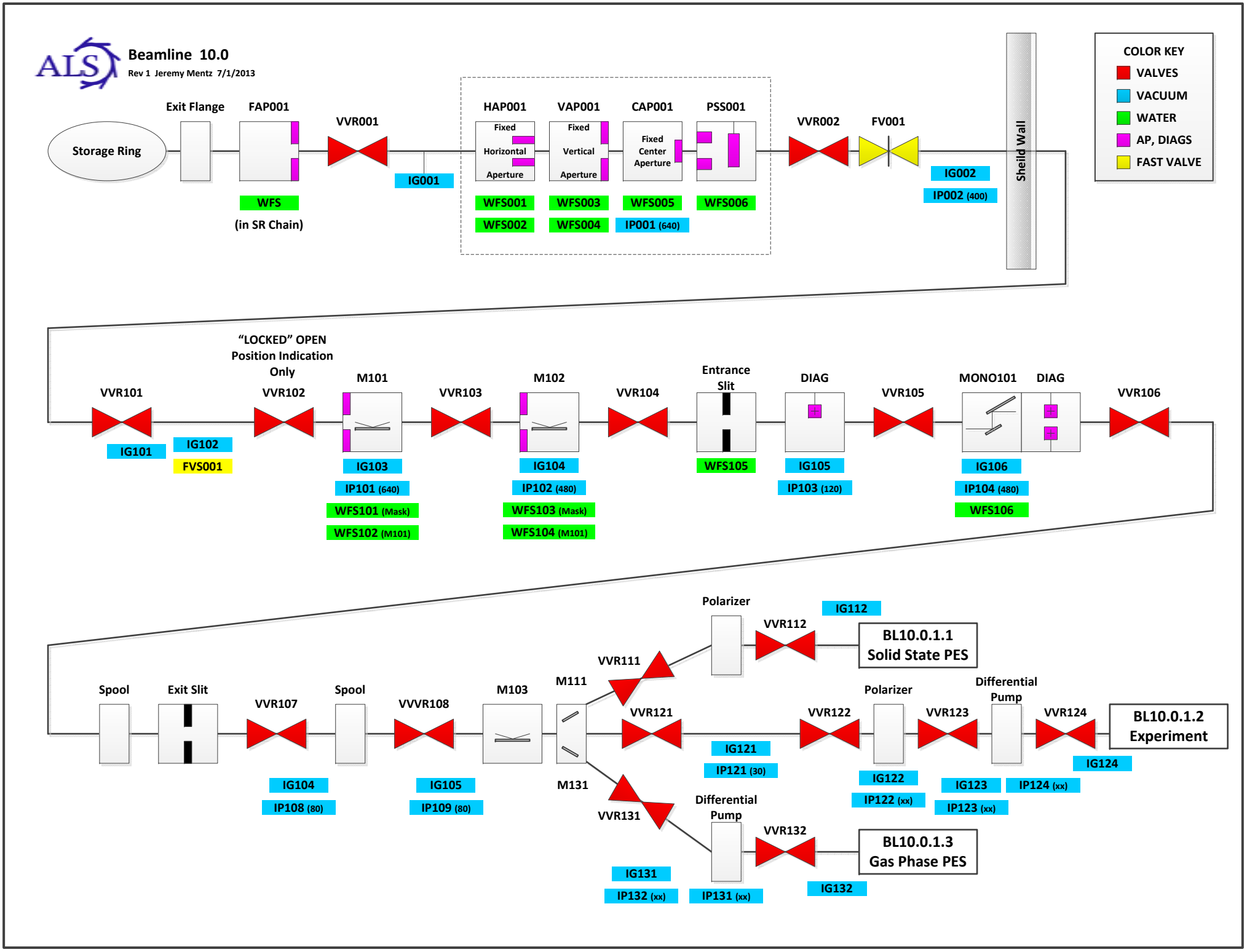
ALS
Beamline 10.0
Rev 1 Jeremy Mentz 7/1/2013
COLOR KEY
VALVES
VACUUM
WATER
AP, DIAGS
FAST VALVE
Storage Ring
Exit Flange
FAP001
WFS
(in SR Chain)
VVR001
IG001
HAP001
Fixed Horizontal Aperture
WFS001
WFS002
VAP001
Fixed Vertical Aperture
WFS003
WFS004
CAP001
Fixed Center Aperture
WFS005
IP001 (640)
PSS001
WFS006
VVR002
FV001
IG002
IP002 (400)
Sheild Wall
VVR101
IG101
IG102
FVS001
"LOCKED" OPEN Position Indication Only
VVR102
M101
IG103
IP101 (640)
WFS101 (Mask)
WFS102 (M101)
VVR103
M102
IG104
IP102 (480)
WFS103 (Mask)
WFS104 (M101)
VVR104
Entrance Slit
WFS105
DIAG
IG105
IP103 (120)
VVR105
MONO101
DIAG
IG106
IP104 (480)
WFS106
VVR106
Spool
Exit Slit
VVR107
IG104
IP108 (80)
Spool
VVVR108
IG105
IP109 (80)
M103
M111
M131
VVR111
VVR121
IG121
IP121 (30)
VVR131
IG131
IP132 (xx)
Polarizer
IG112
VVR112
BL10.0.1.1
Solid State PES
Differential Pump
IP131 (xx)
VVR132
IG132
BL10.0.1.3
Gas Phase PES
VVR122
Polarizer
IG122
IP122 (xx)
VVR123
IG123
IP123 (xx)
Differential Pump
IP124 (xx)
VVR124
IG124
BL10.0.1.2
Experiment

Beamline 10.3.1

Rev 1 Jeremy Mentz 7/1/2013

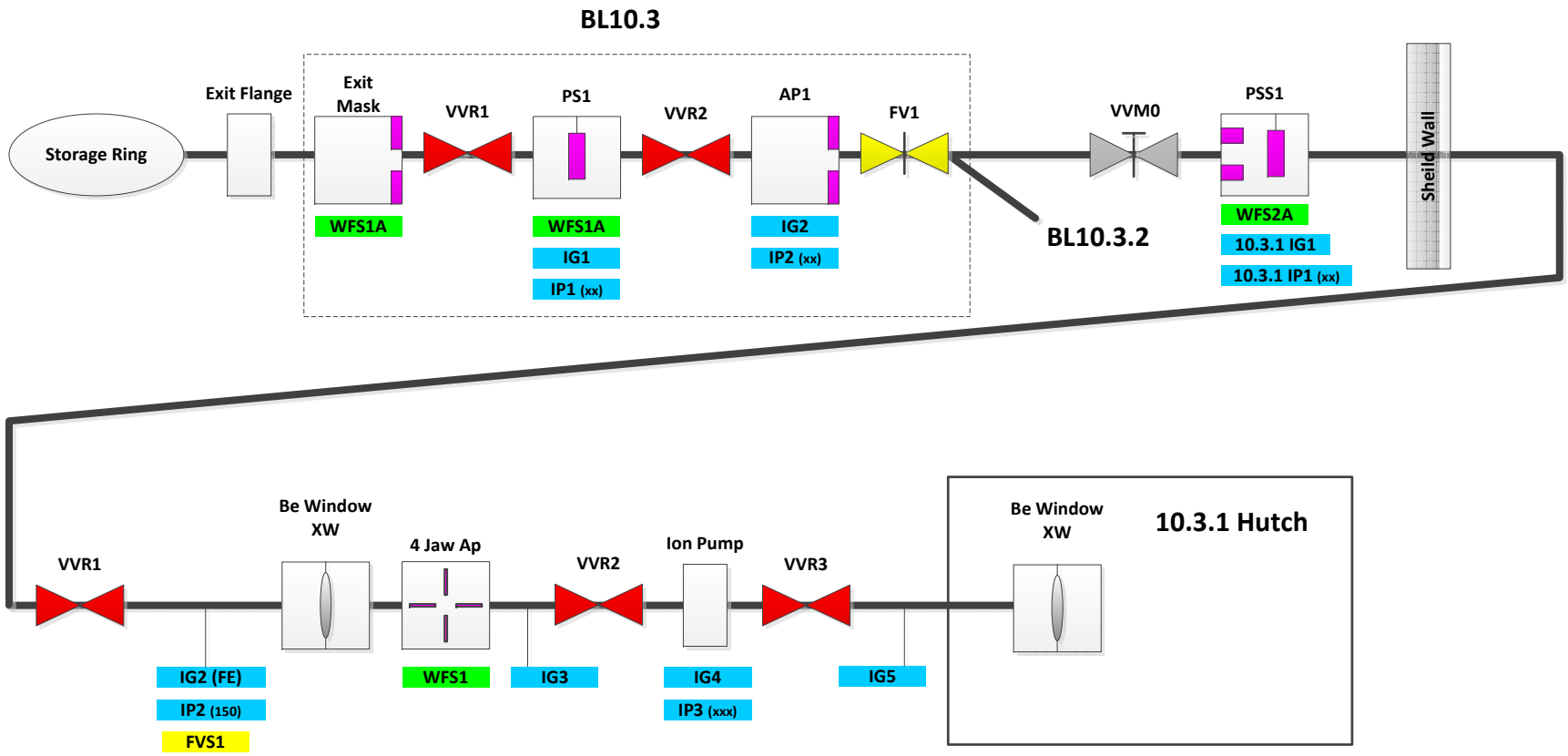

Beamline 10.3.2

Rev 1 Jeremy Mentz 7/1/2013

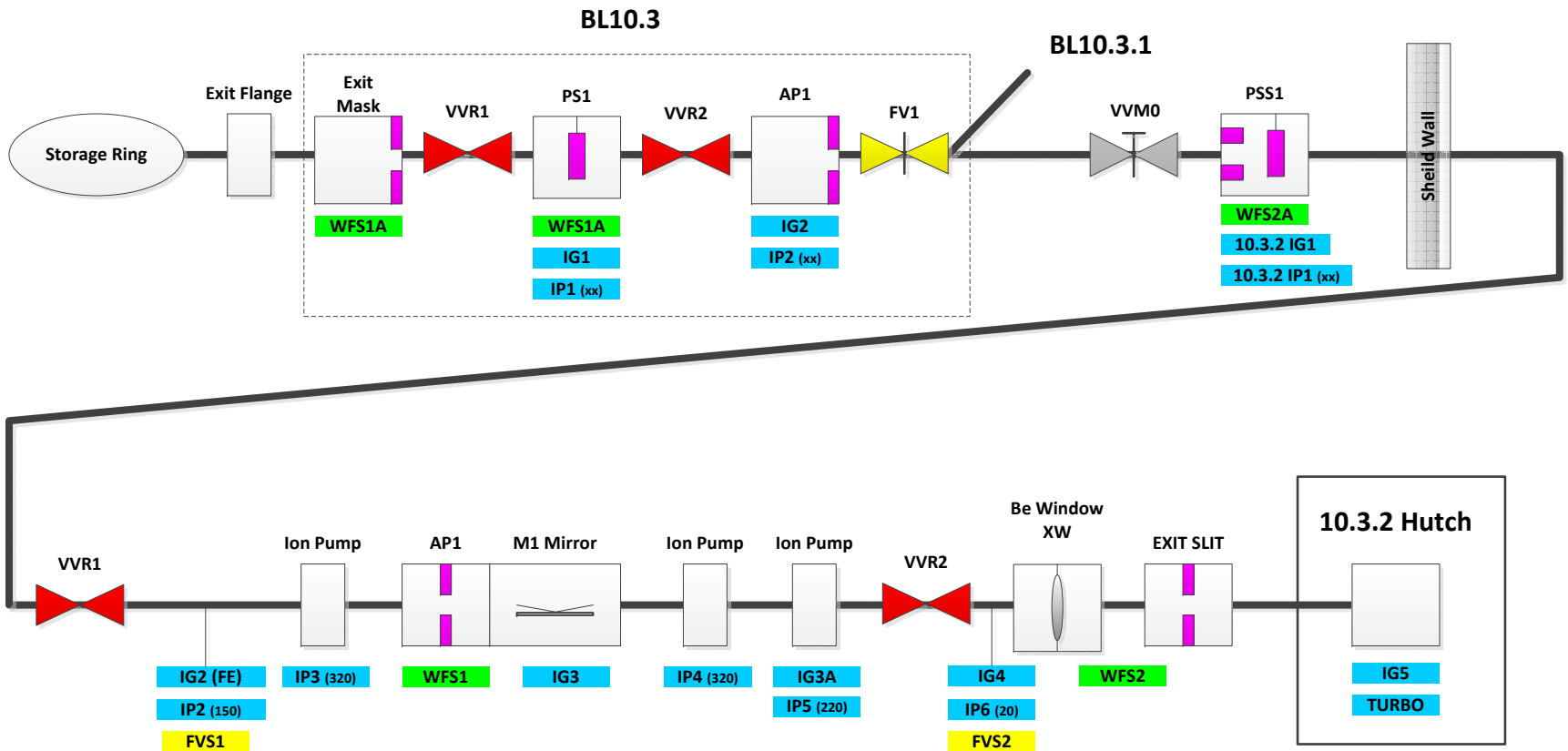

Pfeiffer Vac Gauge (controller in hutch) – interlocked to close PSS1

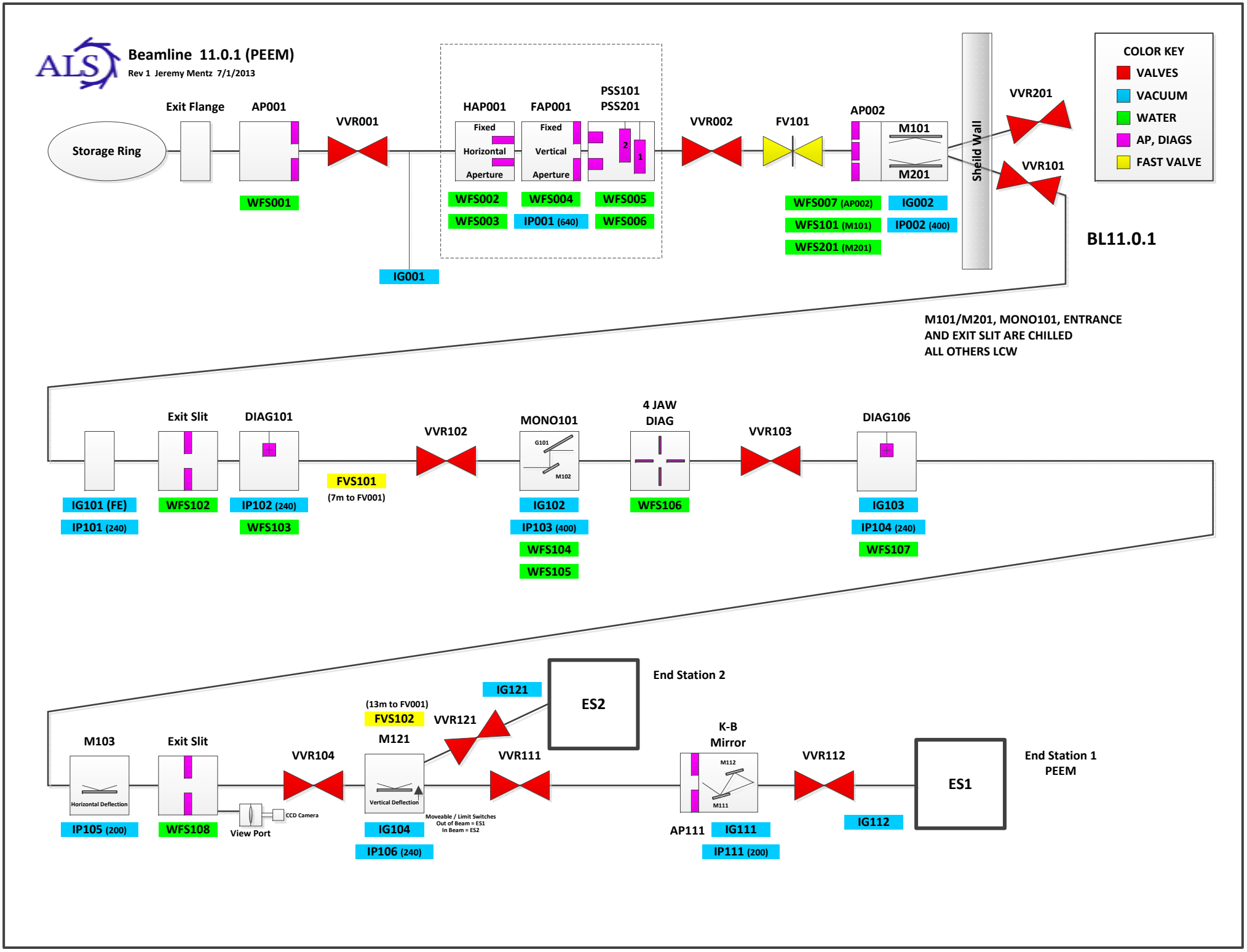
Beamline 11.0.1 (PEEM)
Rev 1 Jeremy Mentz 7/1/2013
COLOR KEY
VALVES
VACUUM
WATER
AP, DIAGS
FAST VALVE
Storage Ring
Exit Flange
AP001
WFS001
VVR001
IG001
HAP001
Fixed
Horizontal
Aperture
WFS002
WFS003
FAP001
Fixed
Vertical
Aperture
WFS004
IP001 (640)
PSS101
PSS201
WFS005
WFS006
VVR002
FV101
AP002
M101
M201
WFS007 (AP002)
WFS101 (M101)
WFS201 (M201)
IG002
IP002 (400)
Sheild Wall
VVR201
VVR101
BL11.0.1
M101/M201, MONO101, ENTRANCE
AND EXIT SLIT ARE CHILLED
ALL OTHERS LCW
IG101 (FE)
IP101 (240)
Exit Slit
WFS102
DIAG101
IP102 (240)
WFS103
FVS101
(7m to FV001)
VVR102
MONO101
G101
M102
IG102
IP103 (400)
WFS104
WFS105
4 JAW
DIAG
WFS106
VVR103
DIAG106
IG103
IP104 (240)
WFS107
M103
Horizontal Deflection
IP105 (200)
Exit Slit
WFS108
View Port
CCD Camera
VVR104
(13m to FV001)
FVS102
M121
Vertical Deflection
IG104
IP106 (240)
Moveable / Limit Switches
Out of Beam = ES1
In Beam = ES2
VVR121
IG121
ES2
End Station 2
VVR111
K-B
Mirror
M112
M111
AP111
IG111
IP111 (200)
VVR112
IG112
ES1
End Station 1
PEEM

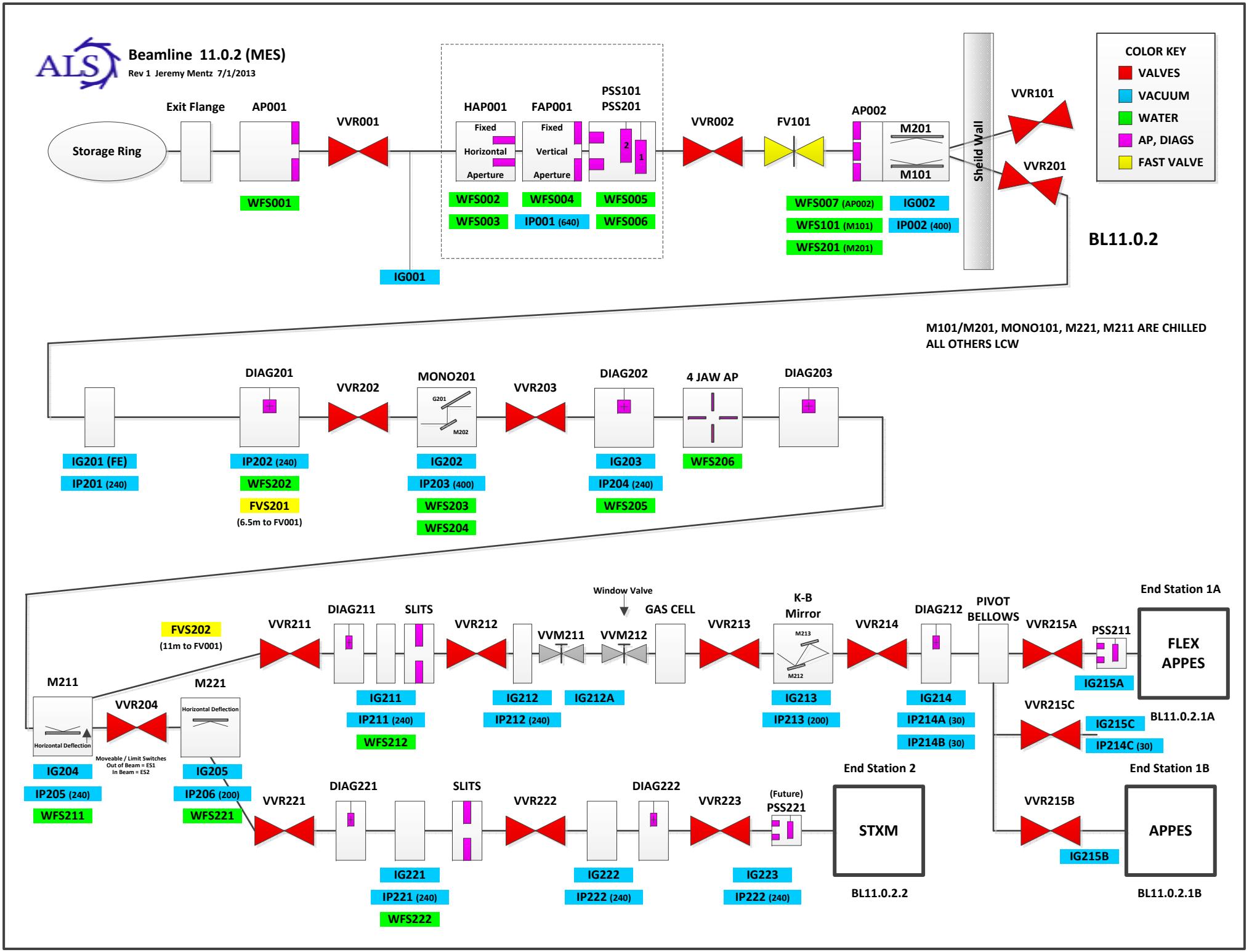
ALS
Beamline 11.0.2 (MES)
Rev 1 Jeremy Mentz 7/1/2013
Storage Ring
Exit Flange
AP001
WFS001
VVR001
IG001
HAP001
Fixed
Horizontal
Aperture
WFS002
WFS003
FAP001
Fixed
Vertical
Aperture
WFS004
IP001 (640)
PSS101
PSS201
WFS005
WFS006
VVR002
FV101
AP002
M201
M101
WFS007 (AP002)
WFS101 (M101)
WFS201 (M201)
IG002
IP002 (400)
Sheild Wall
VVR101
VVR201
COLOR KEY
VALVES
VACUUM
WATER
AP, DIAGS
FAST VALVE
BL11.0.2
M101/M201, MONO101, M221, M211 ARE CHILLED
ALL OTHERS LCW
IG201 (FE)
IP201 (240)
DIAG201
IP202 (240)
WFS202
FVS201
(6.5m to FV001)
VVR202
MONO201
G201
M202
IG202
IP203 (400)
WFS203
WFS204
VVR203
DIAG202
IG203
IP204 (240)
WFS205
4 JAW AP
WFS206
DIAG203
FVS202
(11m to FV001)
VVR211
DIAG211
IG211
IP211 (240)
WFS212
SLITS
VVR212
IG212
IP212 (240)
VVM211
IG212A
Window Valve
VVM212
GAS CELL
VVR213
K-B
Mirror
M213
M212
IG213
IP213 (200)
VVR214
DIAG212
IG214
IP214A (30)
IP214B (30)
PIVOT
BELLOWS
VVR215A
PSS211
IG215A
End Station 1A
FLEX
APPES
BL11.0.2.1A
VVR215C
IG215C
IP214C (30)
End Station 1B
VVR215B
IG215B
APPES
BL11.0.2.1B
M211
Horizontal Deflection
IG204
IP205 (240)
WFS211
VVR204
Moveable / Limit Switches
Out of Beam = ES1
In Beam = ES2
M221
Horizontal Deflection
IG205
IP206 (200)
WFS221
VVR221
DIAG221
IG221
IP221 (240)
WFS222
SLITS
VVR222
IG222
IP222 (240)
DIAG222
VVR223
IG223
IP222 (240)
(Future)
PSS221
End Station 2
STXM
BL11.0.2.2

Beamline 11.3.1

Rev 5 Jeremy Mentz 7/1/2013

Note: Mono & M101 mirror attenuate beam so that PS101 may stay open even with PSS101 closed

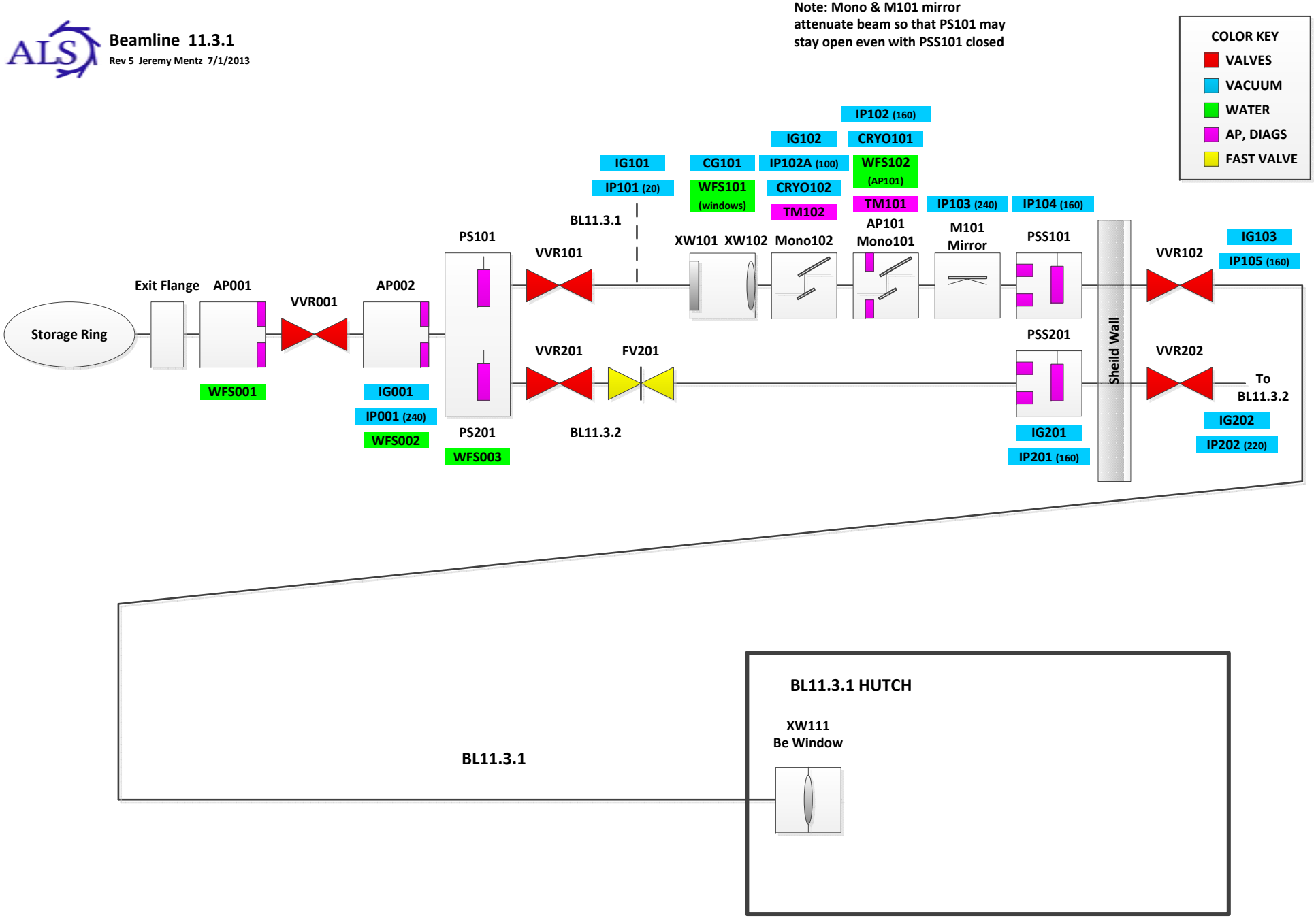

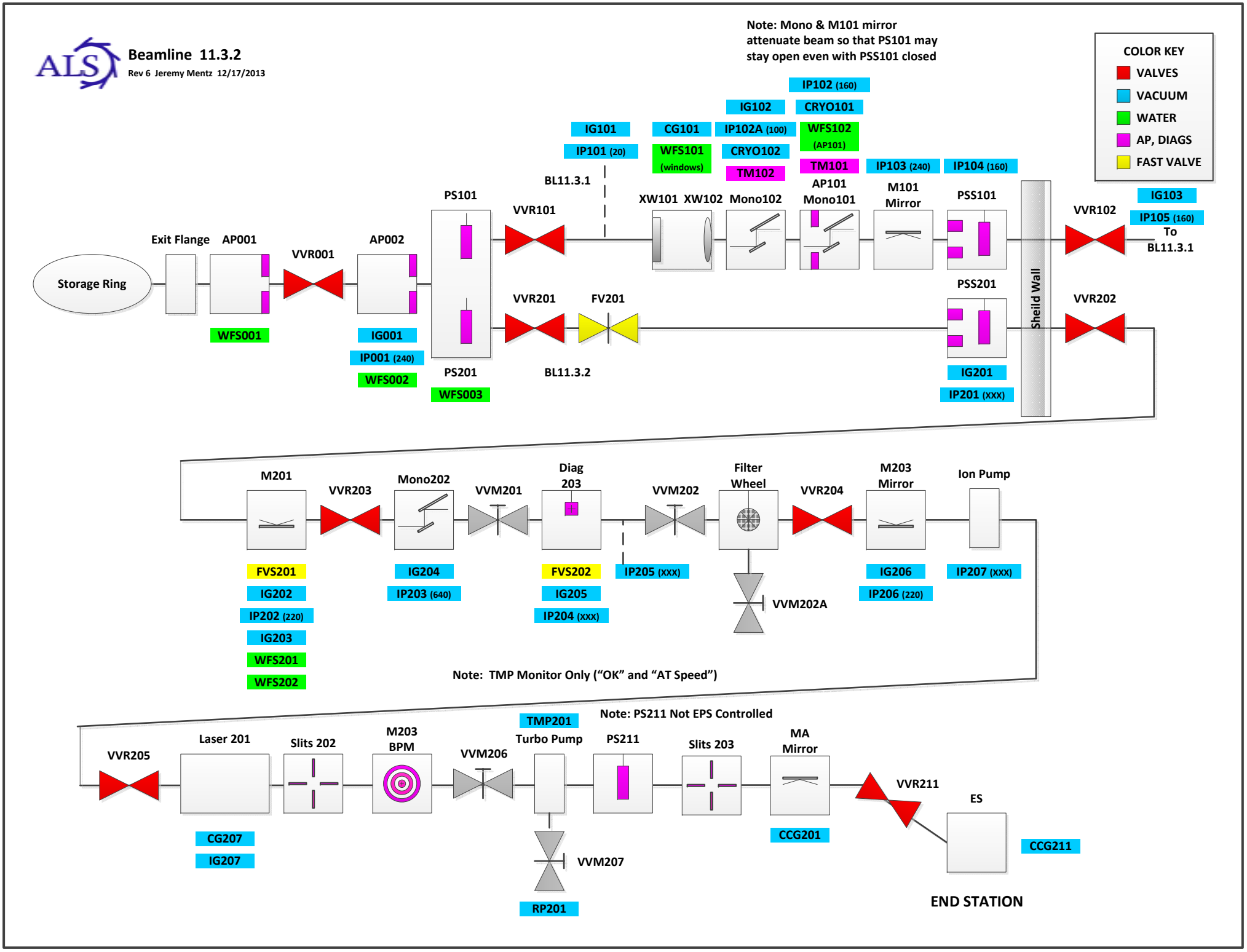
Beamline 11.3.2
Rev 6 Jeremy Mentz 12/17/2013
Note: Mono & M101 mirror attenuate beam so that PS101 may stay open even with PSS101 closed
COLOR KEY
VALVES
VACUUM
WATER
AP, DIAGS
FAST VALVE
Storage Ring
Exit Flange
AP001
WFS001
VVR001
AP002
IG001
IP001 (240)
WFS002
PS101
PS201
WFS003
VVR101
VVR201
FV201
BL11.3.1
BL11.3.2
IG101
IP101 (20)
CG101
WFS101 (windows)
XW101
XW102
IG102
IP102A (100)
CRYO102
TM102
Mono102
IP102 (160)
CRYO101
WFS102 (AP101)
TM101
AP101
Mono101
IP103 (240)
M101 Mirror
IP104 (160)
PSS101
PSS201
IG201
IP201 (XXX)
Sheild Wall
VVR102
IG103
IP105 (160)
To BL11.3.1
VVR202
M201
FVS201
IG202
IP202 (220)
IG203
WFS201
WFS202
VVR203
Mono202
IG204
IP203 (640)
VVM201
Diag 203
FVS202
IG205
IP204 (XXX)
IP205 (XXX)
VVM202
Filter Wheel
VVM202A
VVR204
M203 Mirror
IG206
IP206 (220)
Ion Pump
IP207 (XXX)
Note: TMP Monitor Only ("OK" and "AT Speed")
Note: PS211 Not EPS Controlled
VVR205
Laser 201
CG207
IG207
Slits 202
M203 BPM
VVM206
TMP201
Turbo Pump
VVM207
RP201
PS211
Slits 203
MA Mirror
CCG201
VVR211
ES
CCG211
END STATION

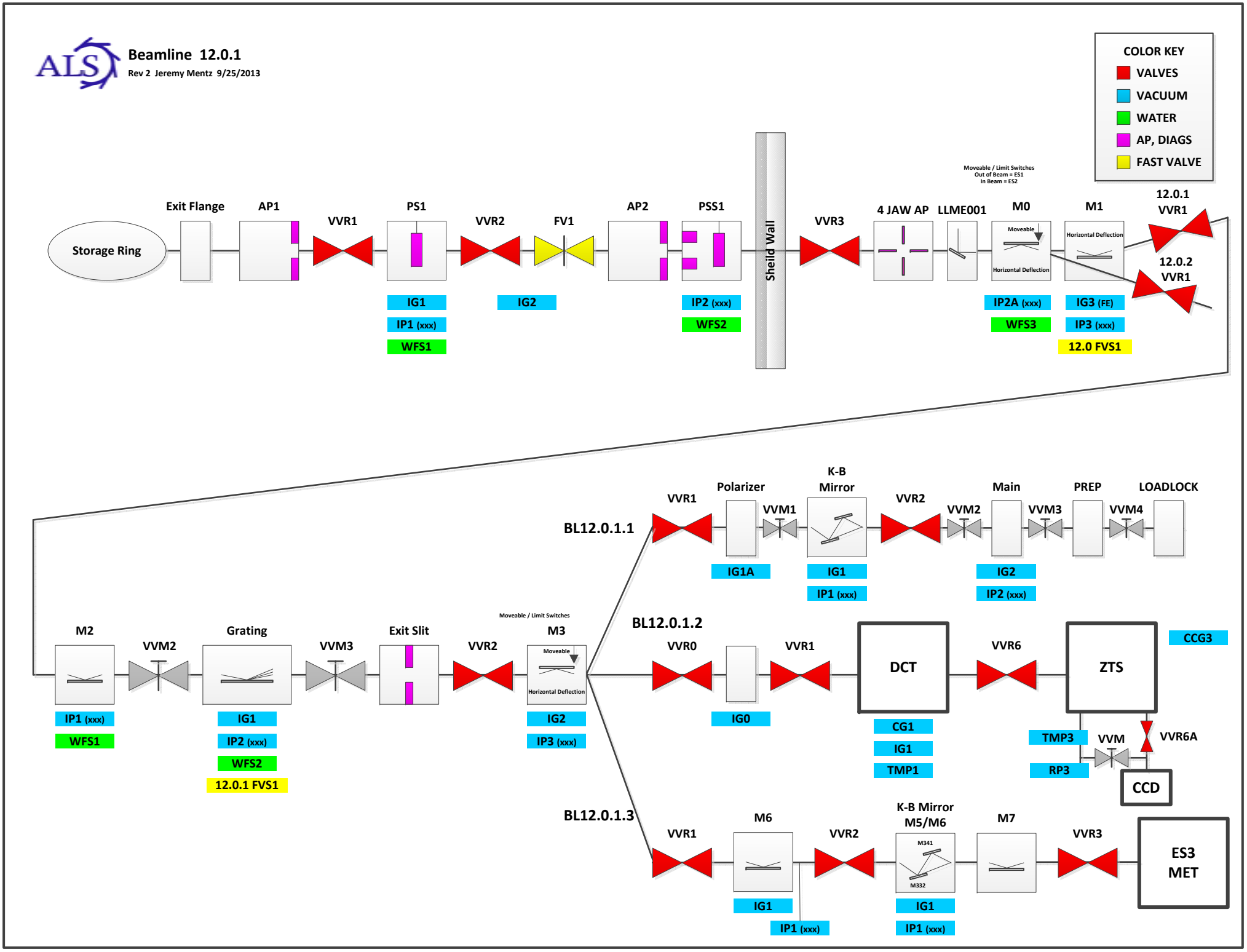
Beamline 12.0.1
Rev 2 Jeremy Mentz 9/25/2013
COLOR KEY
VALVES
VACUUM
WATER
AP, DIAGS
FAST VALVE
Storage Ring
Exit Flange
AP1
VVR1
PS1
IG1
IP1 (xxx)
WFS1
VVR2
IG2
FV1
AP2
PSS1
IP2 (xxx)
WFS2
Sheild Wall
VVR3
4 JAW AP
LLME001
Moveable / Limit Switches
Out of Beam = ES1
In Beam = ES2
M0
Moveable
Horizontal Deflection
IP2A (xxx)
WFS3
M1
Horizontal Deflection
IG3 (FE)
IP3 (xxx)
12.0 FVS1
12.0.1
VVR1
12.0.2
VVR1
BL12.0.1.1
VVR1
Polarizer
IG1A
VVM1
K-B
Mirror
IG1
IP1 (xxx)
VVR2
VVM2
Main
IG2
IP2 (xxx)
VVM3
PREP
VVM4
LOADLOCK
M2
IP1 (xxx)
WFS1
VVM2
Grating
IG1
IP2 (xxx)
WFS2
12.0.1 FVS1
VVM3
Exit Slit
VVR2
Moveable / Limit Switches
M3
Moveable
Horizontal Deflection
IG2
IP3 (xxx)
BL12.0.1.2
VVR0
IG0
VVR1
DCT
CG1
IG1
TMP1
VVR6
ZTS
CCG3
TMP3
RP3
VVM
VVR6A
CCD
BL12.0.1.3
VVR1
M6
IG1
IP1 (xxx)
VVR2
K-B Mirror
M5/M6
M341
M332
IG1
IP1 (xxx)
M7
VVR3
ES3
MET

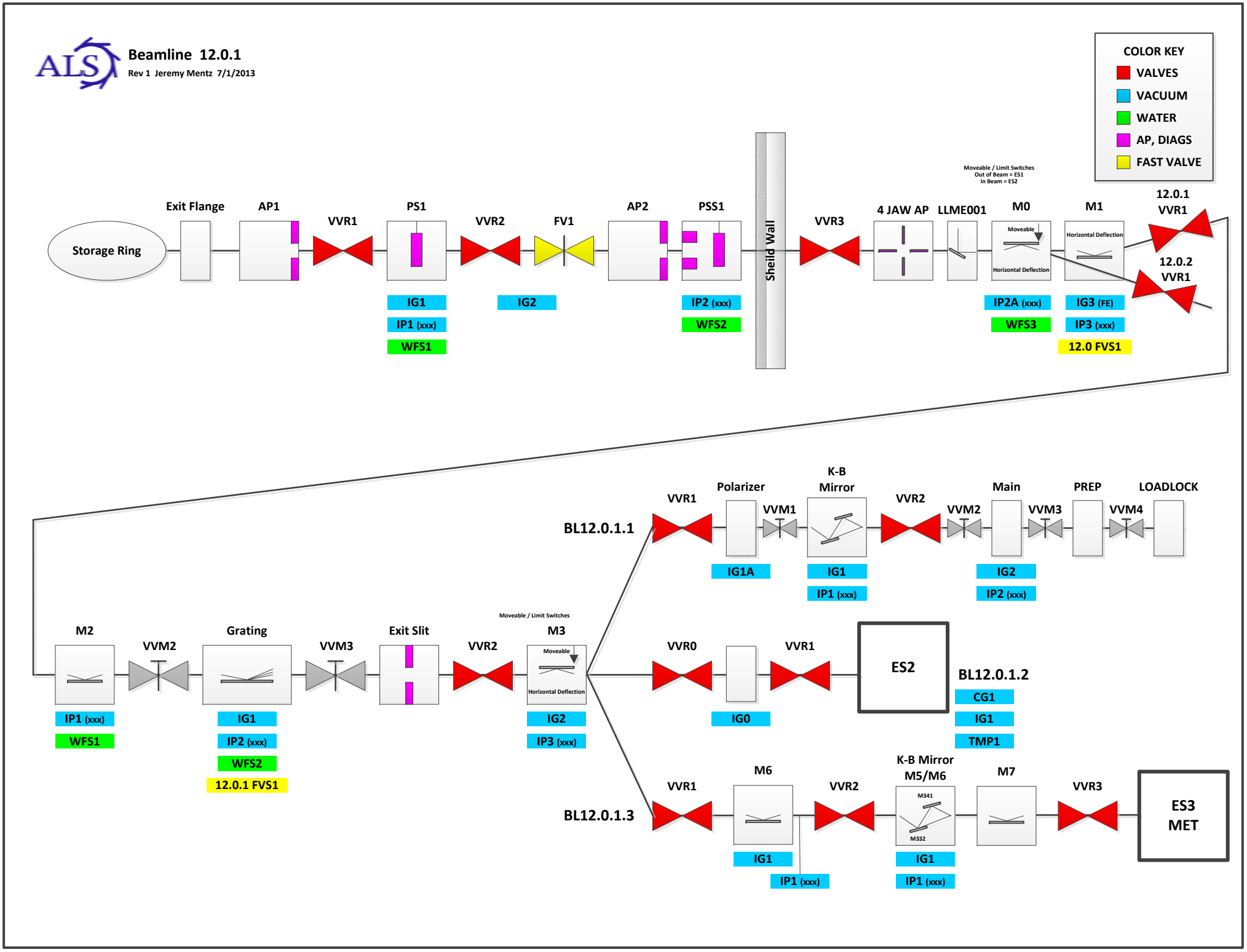
Beamline 12.0.1
Rev 1 Jeremy Mentz 7/1/2013
COLOR KEY
VALVES
VACUUM
WATER
AP, DIAGS
FAST VALVE
Storage Ring
Exit Flange
AP1
VVR1
PS1
IG1
IP1 (xxx)
WFS1
VVR2
IG2
FV1
AP2
PSS1
IP2 (xxx)
WFS2
Sheild Wall
VVR3
4 JAW AP
LLME001
Moveable / Limit Switches
Out of Beam = ES1
In Beam = ES2
M0
Moveable
Horizontal Deflection
IP2A (xxx)
WFS3
M1
Horizontal Deflection
IG3 (FE)
IP3 (xxx)
12.0 FVS1
12.0.1
VVR1
12.0.2
VVR1
BL12.0.1.1
VVR1
Polarizer
IG1A
VVM1
K-B
Mirror
IG1
IP1 (xxx)
VVR2
VVM2
Main
IG2
IP2 (xxx)
VVM3
PREP
VVM4
LOADLOCK
M2
IP1 (xxx)
WFS1
VVM2
Grating
IG1
IP2 (xxx)
WFS2
12.0.1 FVS1
VVM3
Exit Slit
VVR2
Moveable / Limit Switches
M3
Moveable
Horizontal Deflection
IG2
IP3 (xxx)
VVR0
IG0
VVR1
ES2
BL12.0.1.2
CG1
IG1
TMP1
BL12.0.1.3
VVR1
M6
IG1
IP1 (xxx)
VVR2
K-B Mirror
M5/M6
M341
M332
IG1
IP1 (xxx)
M7
VVR3
ES3
MET

Beamline 12.0.2

Rev 1 Jeremy Mentz 7/1/2013

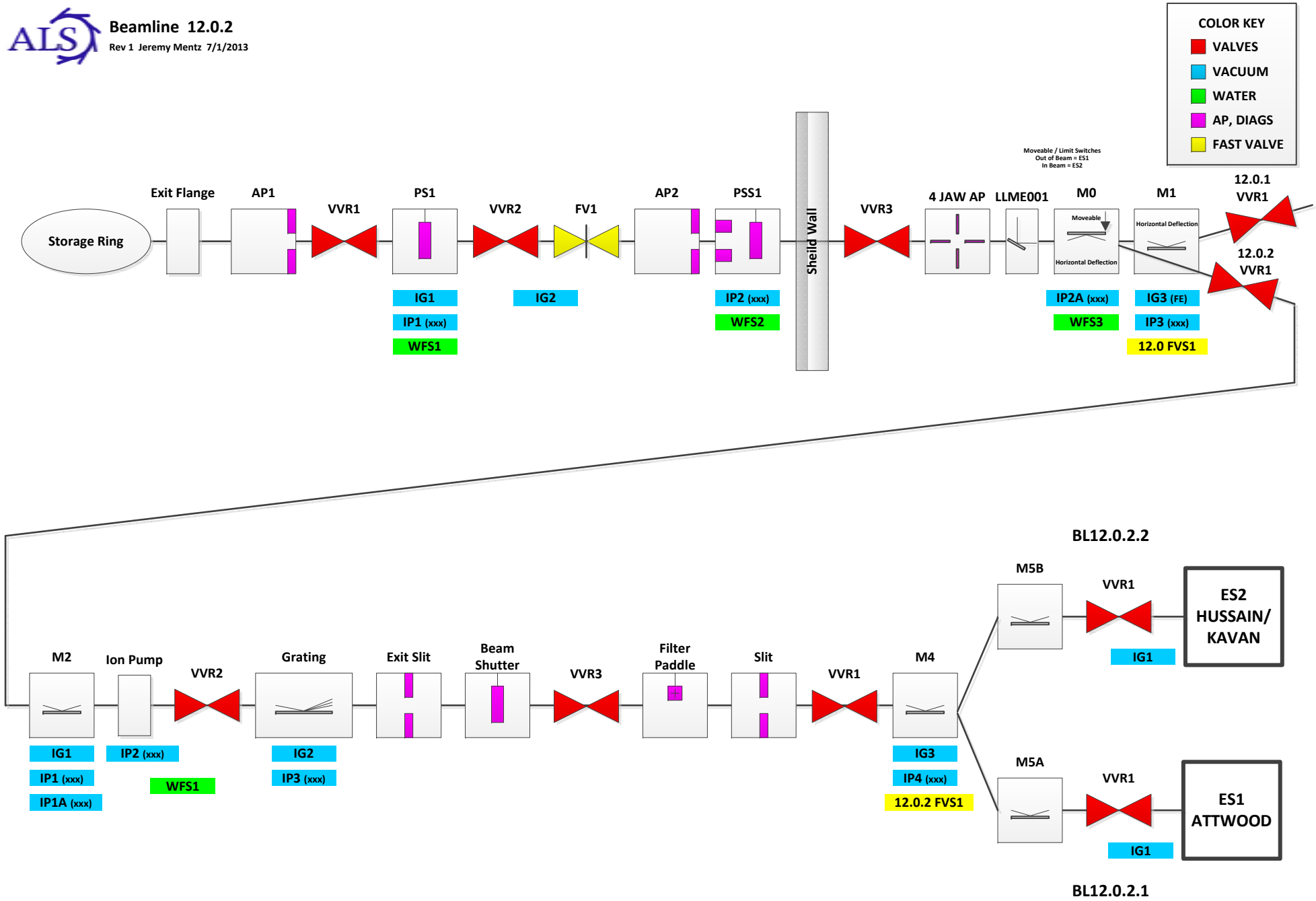

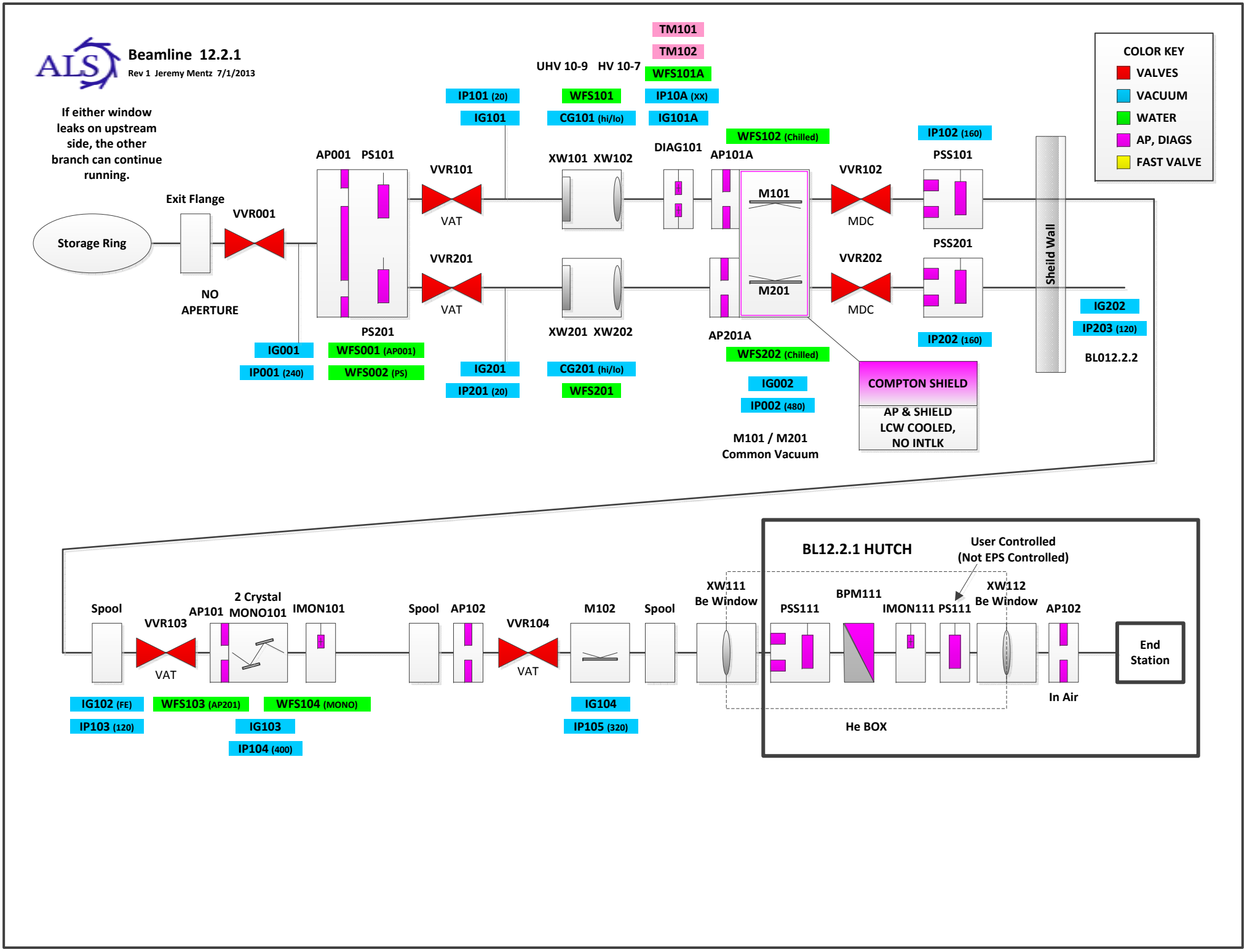
Beamline 12.2.1
Rev 1 Jeremy Mentz 7/1/2013
If either window leaks on upstream side, the other branch can continue running.
COLOR KEY
VALVES
VACUUM
WATER
AP, DIAGS
FAST VALVE
Storage Ring
Exit Flange
VVR001
NO APERTURE
AP001
PS101
PS201
VVR101
VVR201
VAT
VAT
IG001
IP001 (240)
WFS001 (AP001)
WFS002 (PS)
IP101 (20)
IG101
IG201
IP201 (20)
UHV 10-9
HV 10-7
WFS101
CG101 (hi/lo)
XW101
XW102
XW201
XW202
CG201 (hi/lo)
WFS201
TM101
TM102
WFS101A
IP10A (XX)
IG101A
DIAG101
WFS102 (Chilled)
AP101A
M101
M201
AP201A
WFS202 (Chilled)
IG002
IP002 (480)
M101 / M201
Common Vacuum
VVR102
VVR202
MDC
MDC
IP102 (160)
PSS101
PSS201
IP202 (160)
COMPTON SHIELD
AP & SHIELD
LCW COOLED,
NO INTLK
Sheild Wall
IG202
IP203 (120)
BL012.2.2
Spool
VVR103
VAT
IG102 (FE)
IP103 (120)
AP101
2 Crystal
MONO101
IMON101
WFS103 (AP201)
WFS104 (MONO)
IG103
IP104 (400)
Spool
AP102
VVR104
VAT
M102
IG104
IP105 (320)
Spool
XW111
Be Window
BL12.2.1 HUTCH
User Controlled
(Not EPS Controlled)
PSS111
BPM111
IMON111
PS111
XW112
Be Window
AP102
In Air
He BOX
End Station

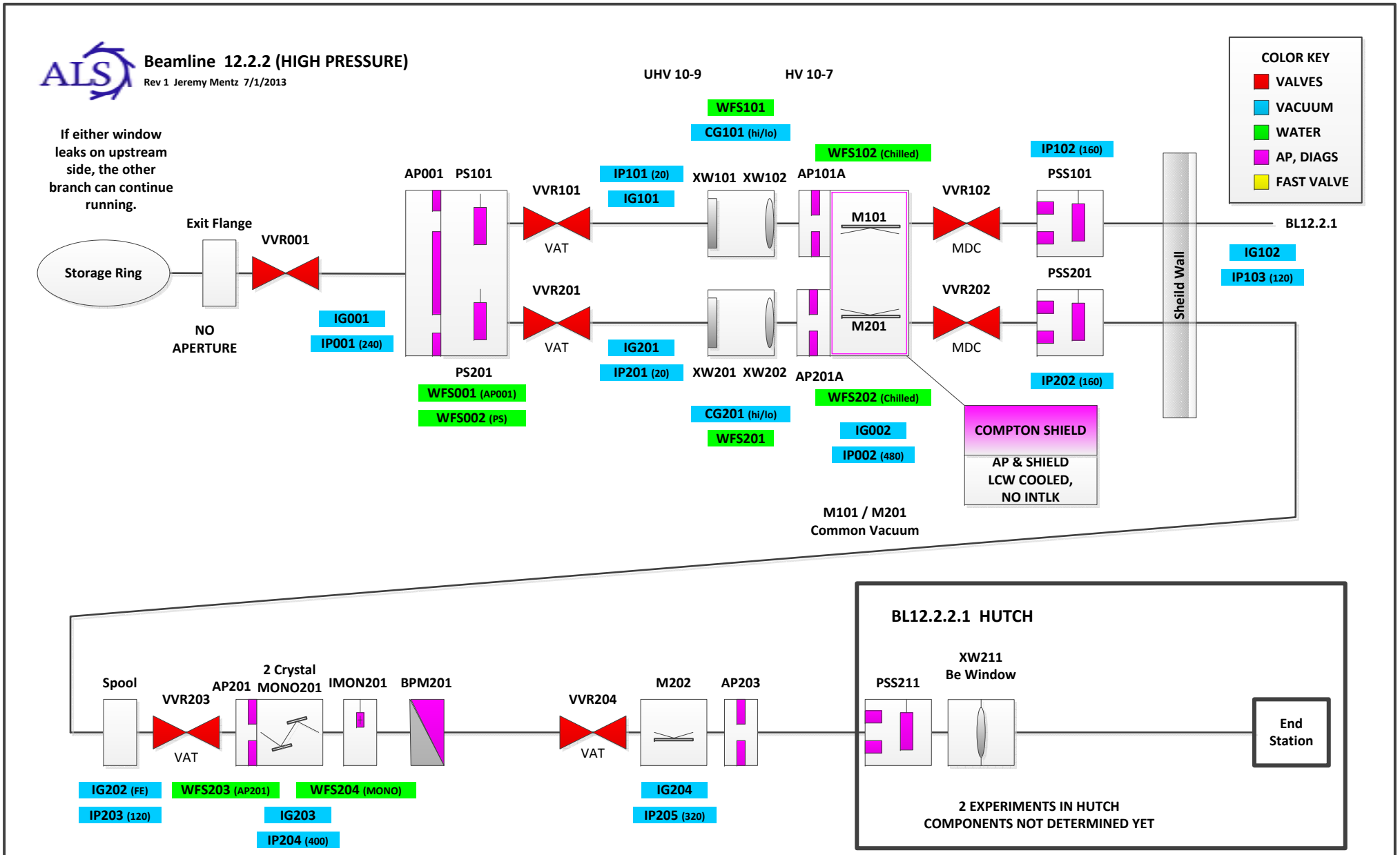
Beamline 12.2.2 (HIGH PRESSURE)
Rev 1 Jeremy Mentz 7/1/2013
If either window leaks on upstream side, the other branch can continue running.
Storage Ring
Exit Flange
NO APERTURE
VVR001
IG001
IP001 (240)
AP001
PS101
PS201
WFS001 (AP001)
WFS002 (PS)
VVR101
VAT
VVR201
VAT
IP101 (20)
IG101
IG201
IP201 (20)
UHV 10-9
HV 10-7
WFS101
CG101 (hi/lo)
XW101
XW102
XW201
XW202
CG201 (hi/lo)
WFS201
AP101A
AP201A
WFS102 (Chilled)
WFS202 (Chilled)
IG002
IP002 (480)
M101
M201
M101 / M201
Common Vacuum
VVR102
MDC
VVR202
MDC
IP102 (160)
PSS101
PSS201
IP202 (160)
COMPTON SHIELD
AP & SHIELD
LCW COOLED,
NO INTLK
Sheild Wall
BL12.2.1
IG102
IP103 (120)
COLOR KEY
VALVES
VACUUM
WATER
AP, DIAGS
FAST VALVE
Spool
VVR203
VAT
AP201
2 Crystal
MONO201
IMON201
BPM201
IG202 (FE)
IP203 (120)
WFS203 (AP201)
WFS204 (MONO)
IG203
IP204 (400)
VVR204
VAT
M202
AP203
IG204
IP205 (320)
BL12.2.2.1 HUTCH
PSS211
XW211
Be Window
End Station
2 EXPERIMENTS IN HUTCH
COMPONENTS NOT DETERMINED YET

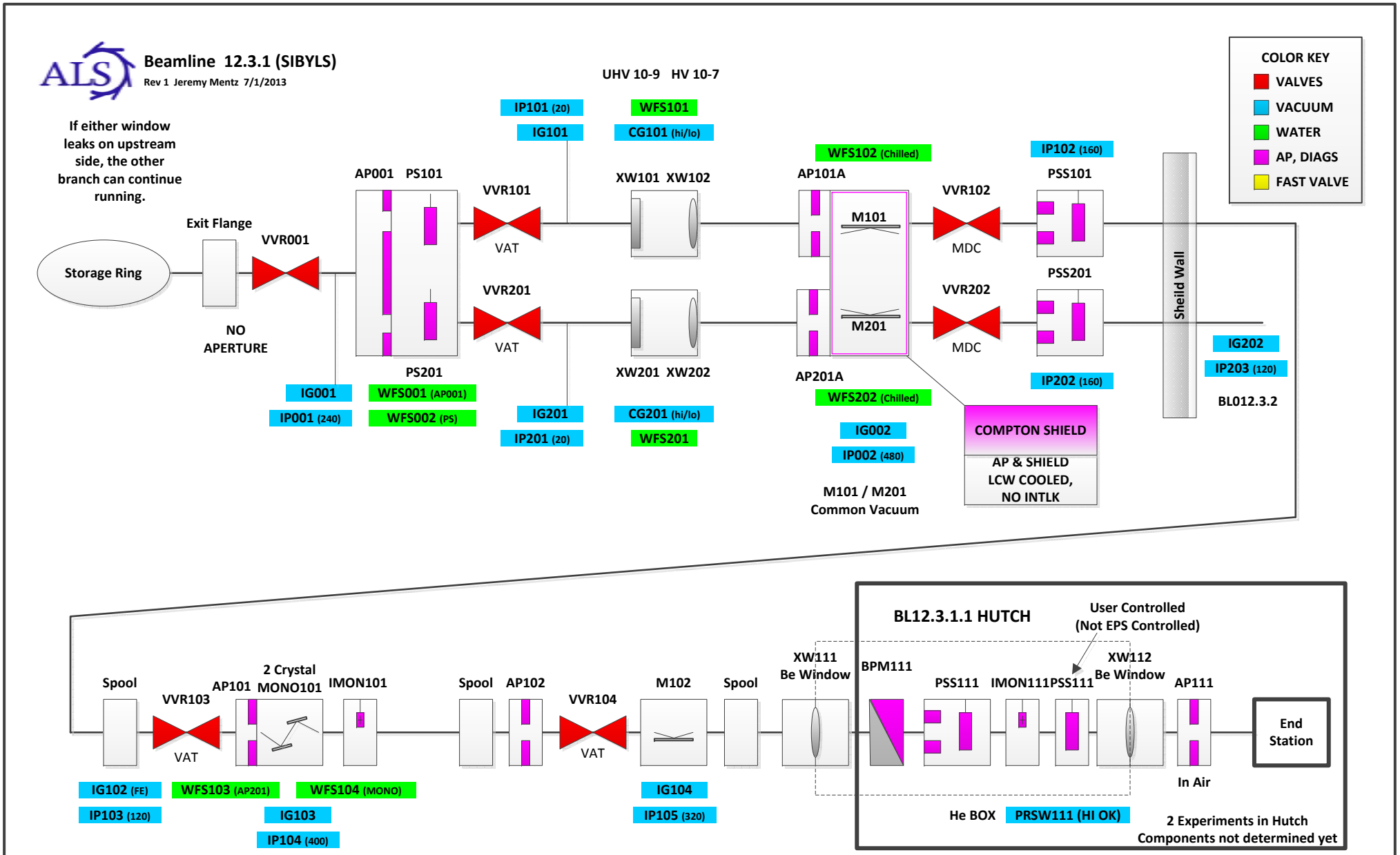
ALS
Beamline 12.3.1 (SIBYLS)
Rev 1 Jeremy Mentz 7/1/2013
If either window leaks on upstream side, the other branch can continue running.
UHV 10-9 HV 10-7
COLOR KEY
VALVES
VACUUM
WATER
AP, DIAGS
FAST VALVE
Storage Ring
Exit Flange
VVR001
NO APERTURE
IG001
IP001 (240)
AP001
PS101
PS201
WFS001 (AP001)
WFS002 (PS)
VVR101
VAT
VVR201
VAT
IP101 (20)
IG101
IG201
IP201 (20)
WFS101
CG101 (hi/lo)
CG201 (hi/lo)
WFS201
XW101 XW102
XW201 XW202
WFS102 (Chilled)
AP101A
M101
M201
AP201A
WFS202 (Chilled)
IG002
IP002 (480)
M101 / M201
Common Vacuum
VVR102
MDC
VVR202
MDC
IP102 (160)
PSS101
PSS201
IP202 (160)
COMPTON SHIELD
AP & SHIELD
LCW COOLED,
NO INTLK
Sheild Wall
IG202
IP203 (120)
BL012.3.2
Spool
VVR103
VAT
AP101
2 Crystal
MONO101
IMON101
IG102 (FE)
IP103 (120)
WFS103 (AP201)
WFS104 (MONO)
IG103
IP104 (400)
Spool
AP102
VVR104
VAT
M102
IG104
IP105 (320)
Spool
XW111
Be Window
BL12.3.1.1 HUTCH
User Controlled
(Not EPS Controlled)
BPM111
PSS111
IMON111
PSS111
XW112
Be Window
AP111
In Air
He BOX
PRSW111 (HI OK)
2 Experiments in Hutch
Components not determined yet
End Station

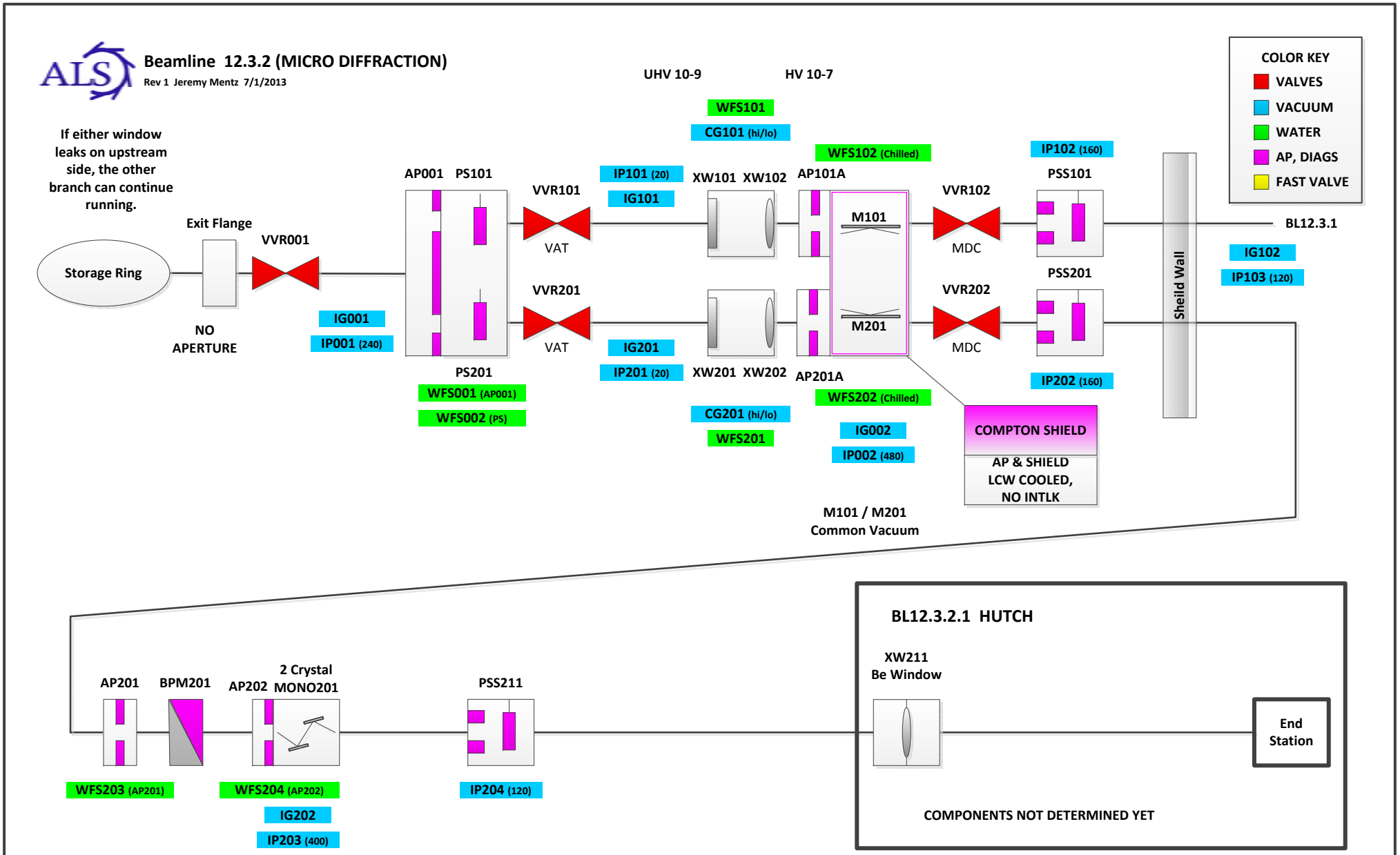
Beamline 12.3.2 (MICRO DIFFRACTION)
Rev 1 Jeremy Mentz 7/1/2013
UHV 10-9
HV 10-7
COLOR KEY
VALVES
VACUUM
WATER
AP, DIAGS
FAST VALVE
If either window leaks on upstream side, the other branch can continue running.
Storage Ring
Exit Flange
VVR001
NO APERTURE
IG001
IP001 (240)
AP001
PS101
PS201
WFS001 (AP001)
WFS002 (PS)
VVR101
VAT
VVR201
VAT
IP101 (20)
IG101
IG201
IP201 (20)
WFS101
CG101 (hi/lo)
XW101
XW102
XW201
XW202
CG201 (hi/lo)
WFS201
AP101A
AP201A
WFS102 (Chilled)
WFS202 (Chilled)
IG002
IP002 (480)
M101
M201
M101 / M201
Common Vacuum
VVR102
MDC
VVR202
MDC
IP102 (160)
PSS101
PSS201
IP202 (160)
COMPTON SHIELD
AP & SHIELD
LCW COOLED,
NO INTLK
Sheild Wall
BL12.3.1
IG102
IP103 (120)
AP201
BPM201
AP202
2 Crystal
MONO201
PSS211
WFS203 (AP201)
WFS204 (AP202)
IG202
IP203 (400)
IP204 (120)
BL12.3.2.1 HUTCH
XW211
Be Window
End Station
COMPONENTS NOT DETERMINED YET