Beamline 2.1.2

rev 2 7/17/06 Ken Woolfe

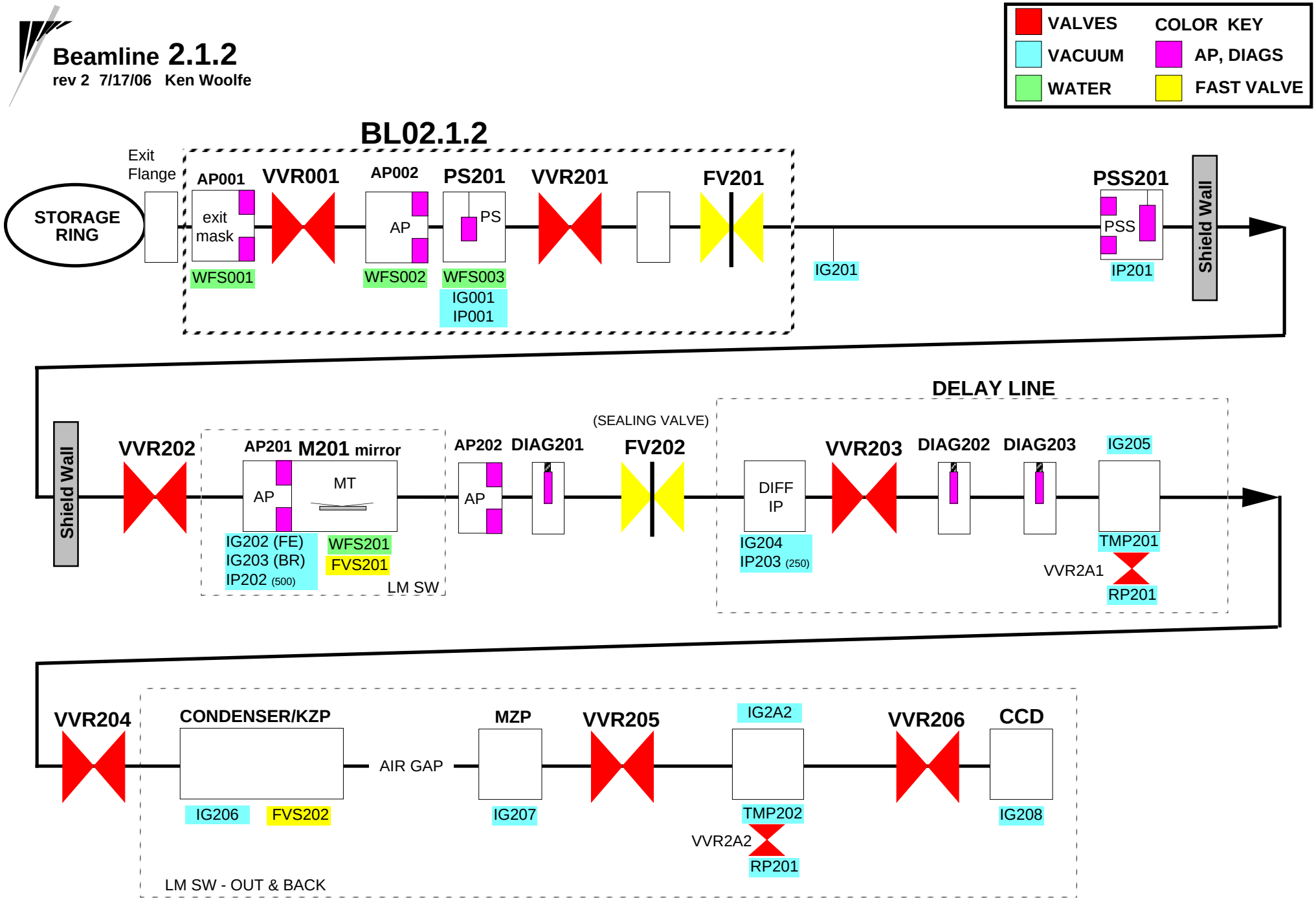

Beamline 2.1.2
rev 2 7/17/06 Ken Woolfe

FIRST LIGHT CONFIGURATION

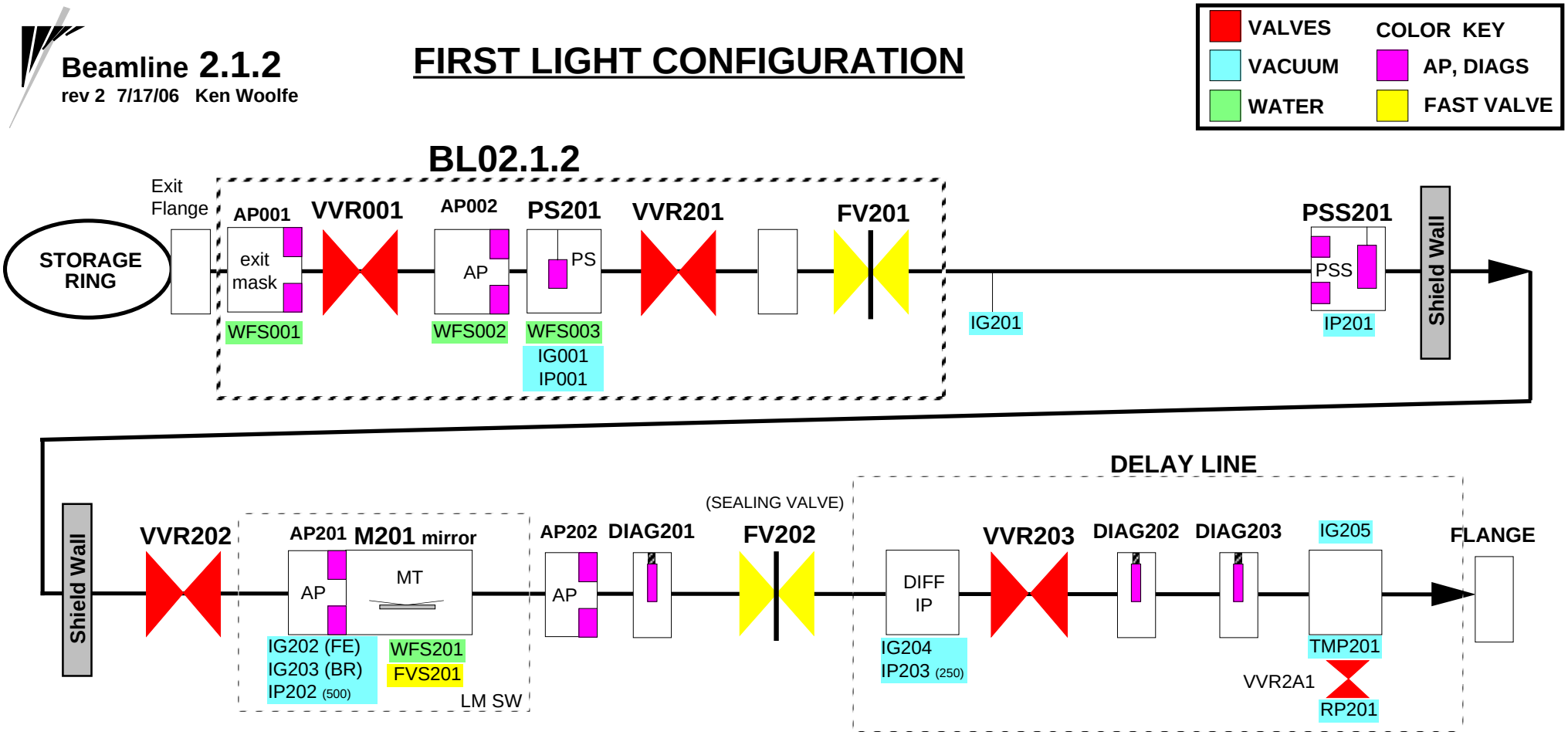

Beamline 3.2.1 LIGA
(WCL - West Coast Liga)

rev 0 10/24/02 Ken Woolfe

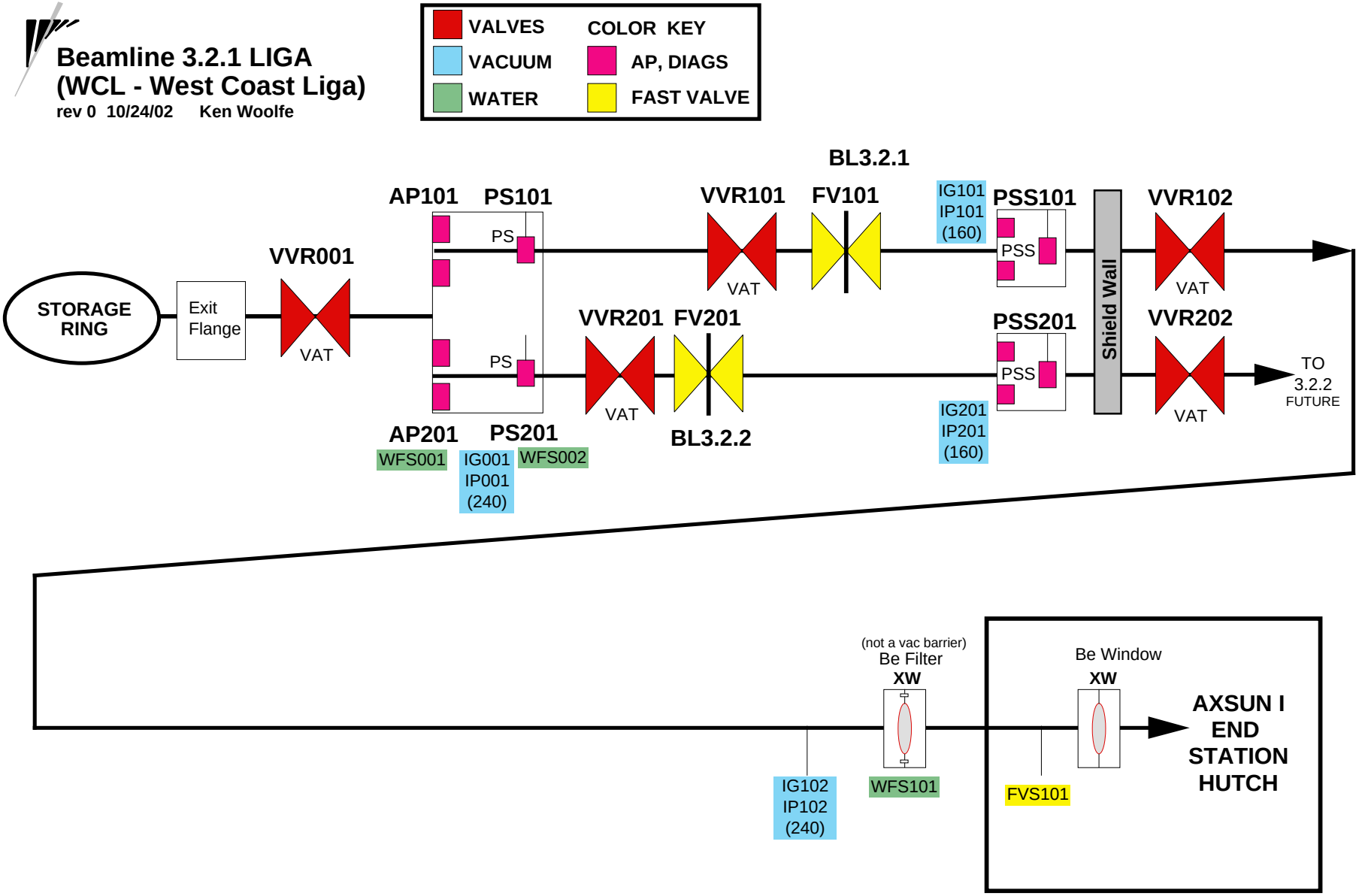

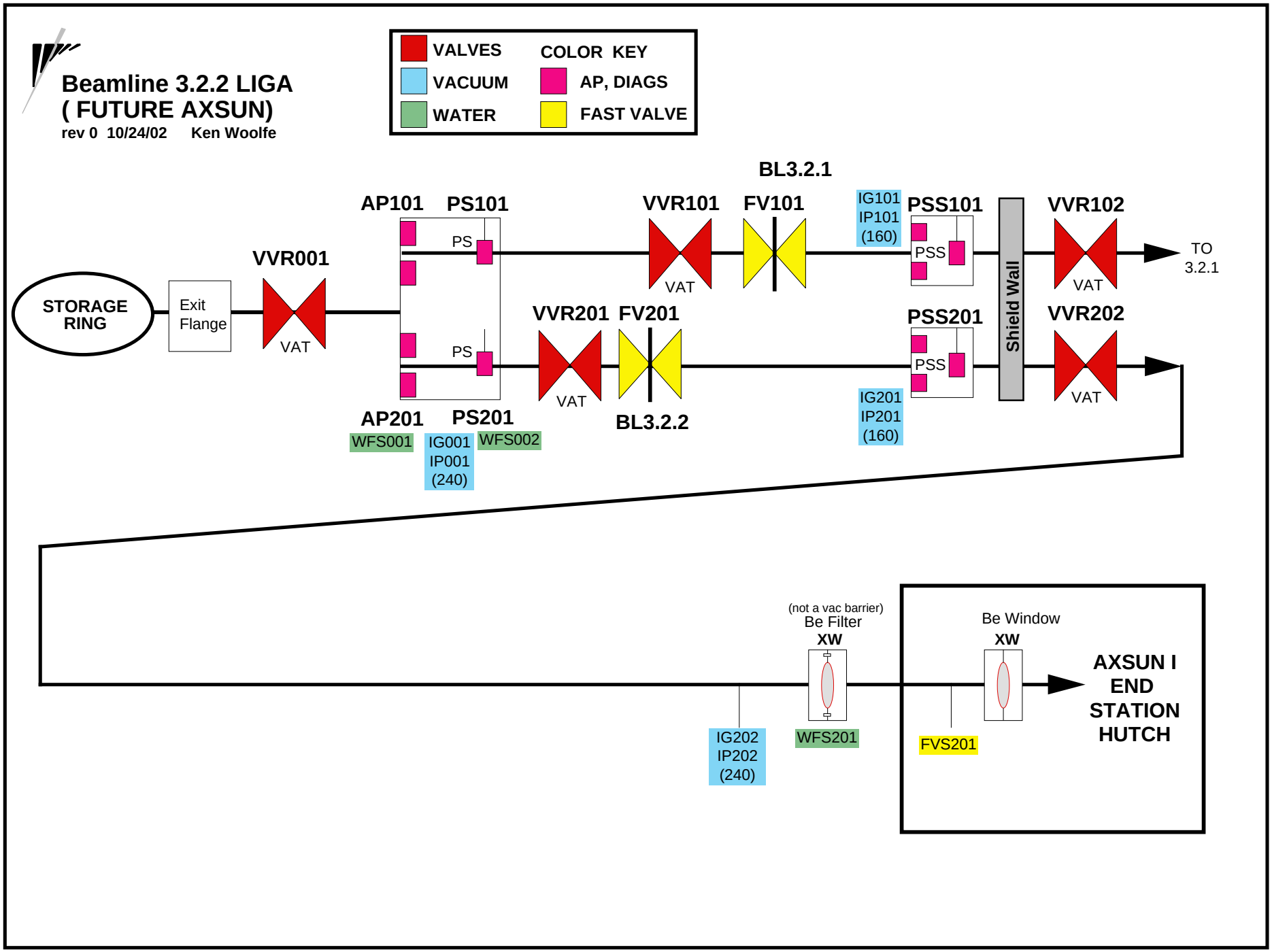
Beamline 3.2.2 LIGA
(FUTURE AXSUN)
rev 0 10/24/02 Ken Woolfe
VALVES
VACUUM
WATER
COLOR KEY
AP, DIAGS
FAST VALVE
BL3.2.1
AP101
PS101
VVR101
FV101
IG101
IP101
(160)
PSS101
VVR102
TO
3.2.1
VVR001
STORAGE
RING
Exit
Flange
VAT
PS
PSS
Shield Wall
VVR201
FV201
PSS201
VVR202
BL3.2.2
IG201
IP201
(160)
AP201
PS201
WFS001
IG001
IP001
(240)
WFS002
(not a vac barrier)
Be Filter
XW
Be Window
XW
AXSUN I
END
STATION
HUTCH
IG202
IP202
(240)
WFS201
FVS201

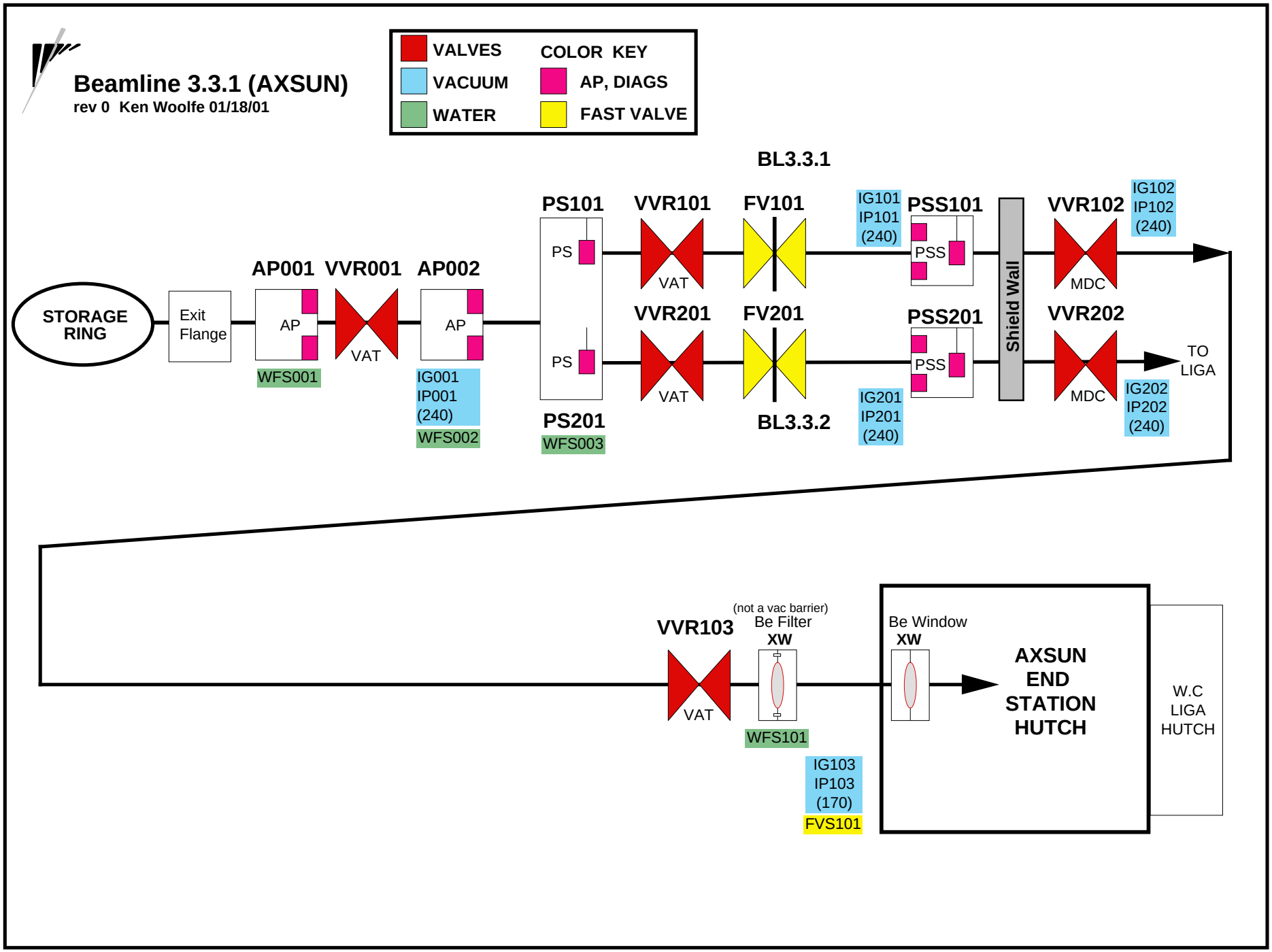
Beamline 3.3.1 (AXSUN)
rev 0 Ken Woolfe 01/18/01
VALVES
VACUUM
WATER
COLOR KEY
AP, DIAGS
FAST VALVE
BL3.3.1
STORAGE RING
Exit Flange
AP001
AP
WFS001
VVR001
VAT
AP002
AP
IG001
IP001
(240)
WFS002
PS101
PS
PS
PS201
WFS003
VVR101
VAT
VVR201
VAT
FV101
FV201
BL3.3.2
IG101
IP101
(240)
IG201
IP201
(240)
PSS101
PSS
PSS201
PSS
Shield Wall
VVR102
MDC
VVR202
MDC
IG102
IP102
(240)
IG202
IP202
(240)
TO LIGA
VVR103
VAT
(not a vac barrier)
Be Filter
XW
WFS101
IG103
IP103
(170)
FVS101
Be Window
XW
AXSUN END STATION HUTCH
W.C LIGA HUTCH

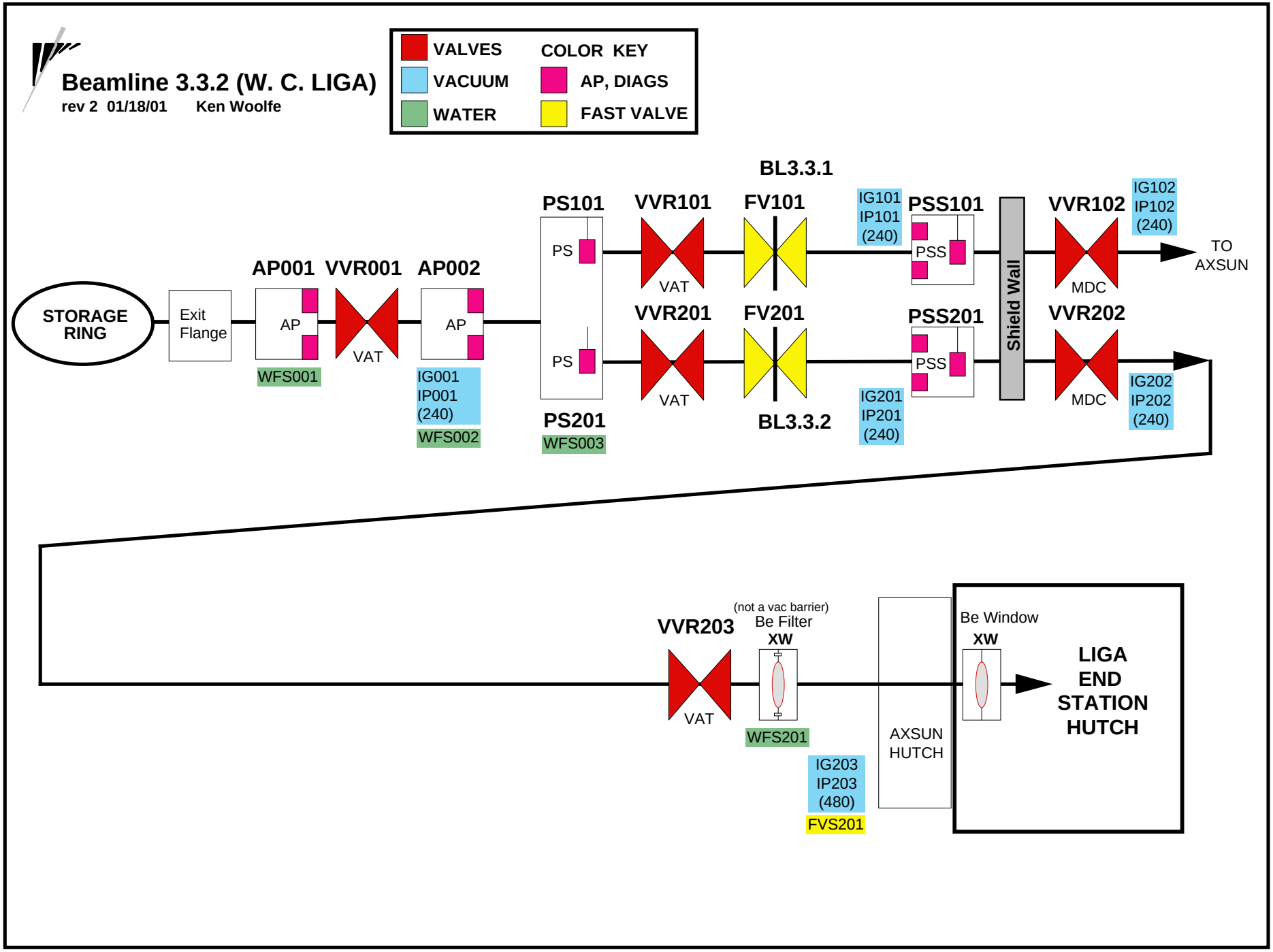
Beamline 3.3.2 (W. C. LIGA)
rev 2 01/18/01 Ken Woolfe
VALVES
VACUUM
WATER
COLOR KEY
AP, DIAGS
FAST VALVE
BL3.3.1
PS101
VVR101
FV101
IG101
IP101
(240)
PSS101
VVR102
IG102
IP102
(240)
TO
AXSUN
STORAGE
RING
Exit
Flange
AP001
VVR001
AP002
AP
VAT
WFS001
IG001
IP001
(240)
WFS002
PS
PS201
WFS003
VVR201
FV201
PSS201
PSS
Shield Wall
MDC
VVR202
IG202
IP202
(240)
IG201
IP201
(240)
BL3.3.2
VVR203
(not a vac barrier)
Be Filter
XW
WFS201
IG203
IP203
(480)
FVS201
AXSUN
HUTCH
Be Window
LIGA
END
STATION
HUTCH

Beamline 4.0.2 EPS dwg.

rev 7 Ken Woolfe 4/29/09

COLOR KEY
- VALVES
- VACUUM GAUGES & PUMPS
- APERTURES, STOPS, DIAGS
- FAST VALVE & SENSORS
- WATER FLOW SWS.

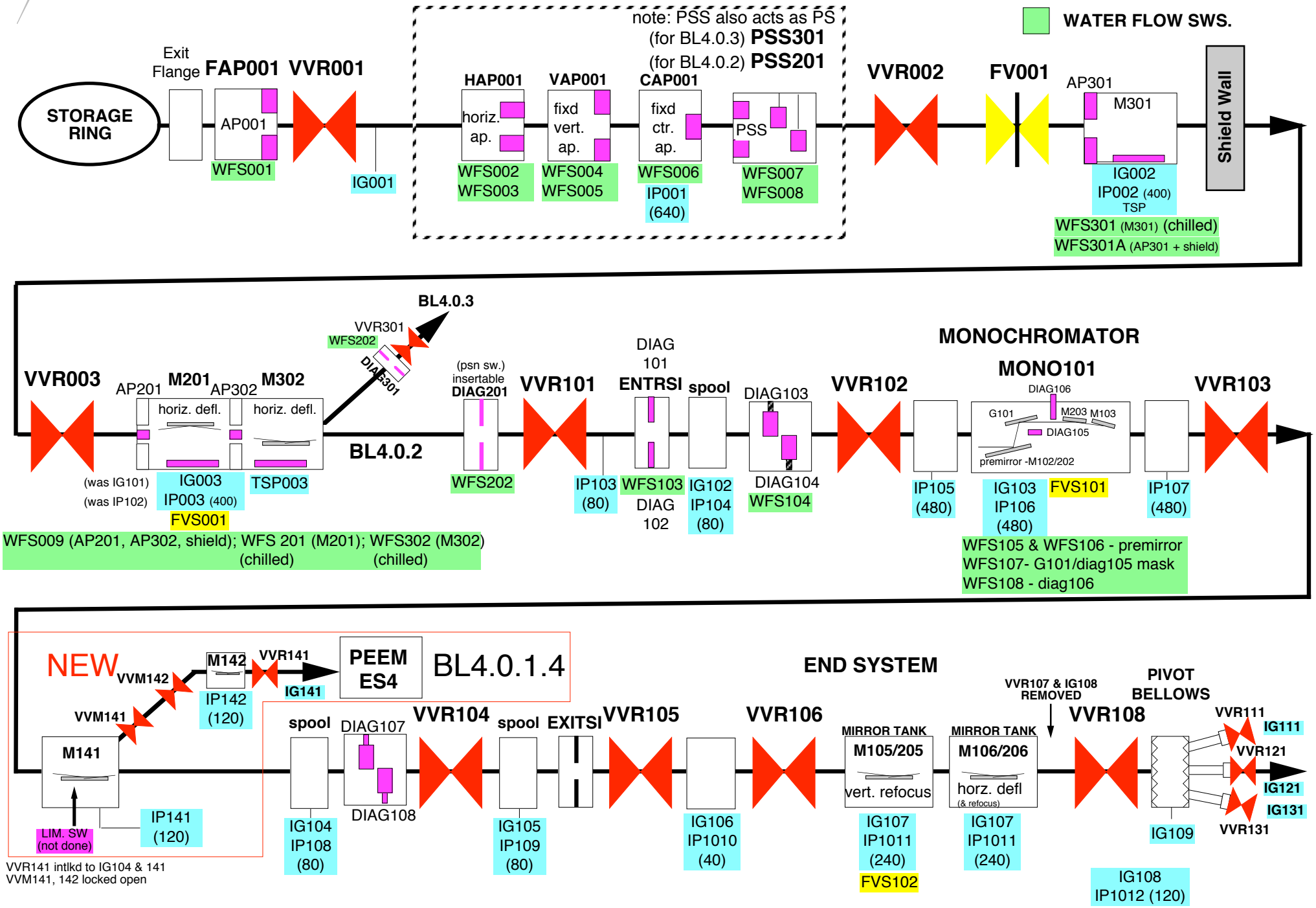

Beamline 4.0.3 Instrumentation dwg.

rev 12 Ken Woolfe 10/23/09

COLOR KEY
- VALVES
- VACUUM GAUGES & PUMPS
- APERTURES, STOPS, DIAGS
- FAST VALVE & SENSORS
- WATER FLOW SWS.

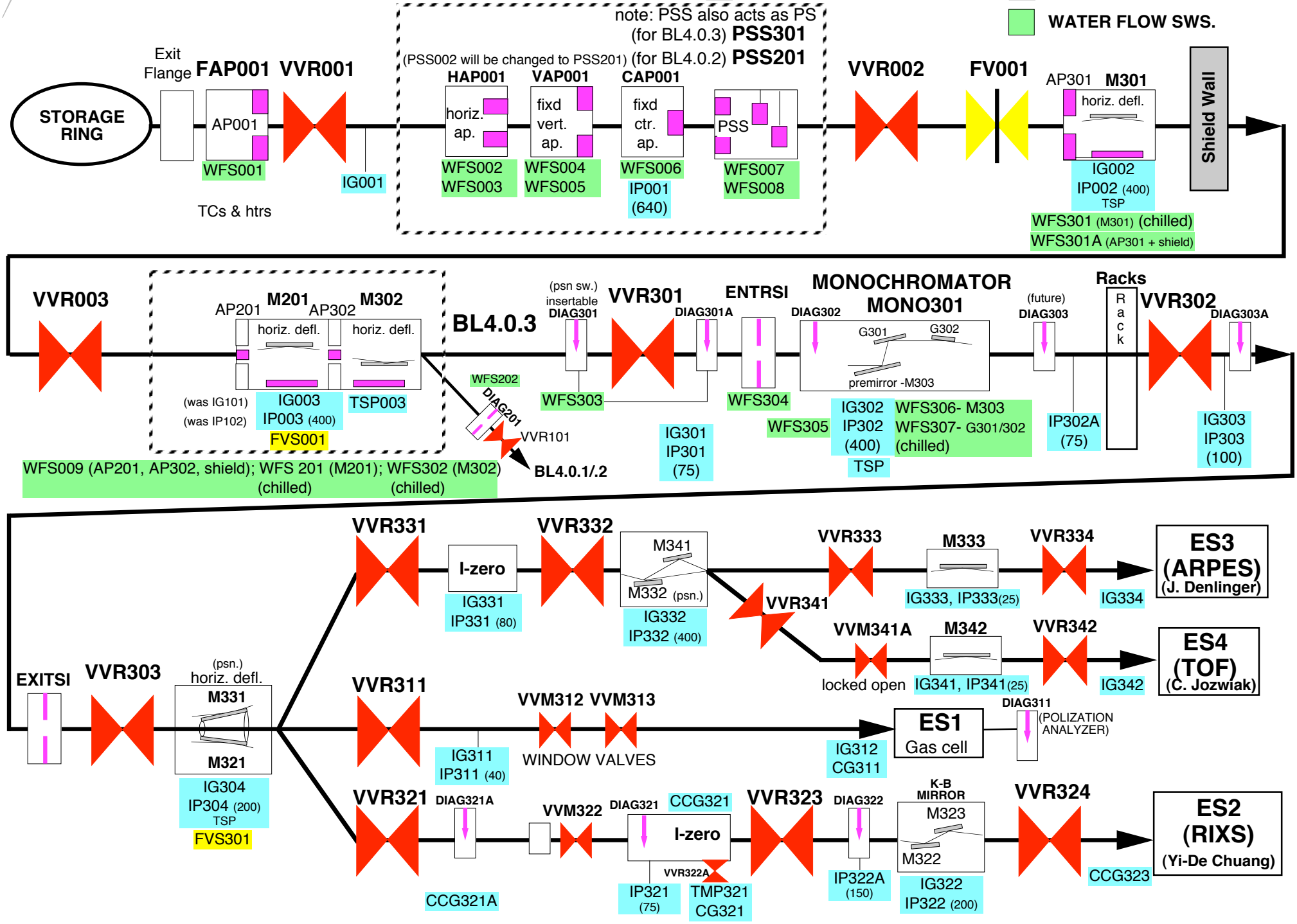

BL 4.0 MIRROR SWITCHYARD

Ken Woolfe 9/25/98 (rev 9/01)

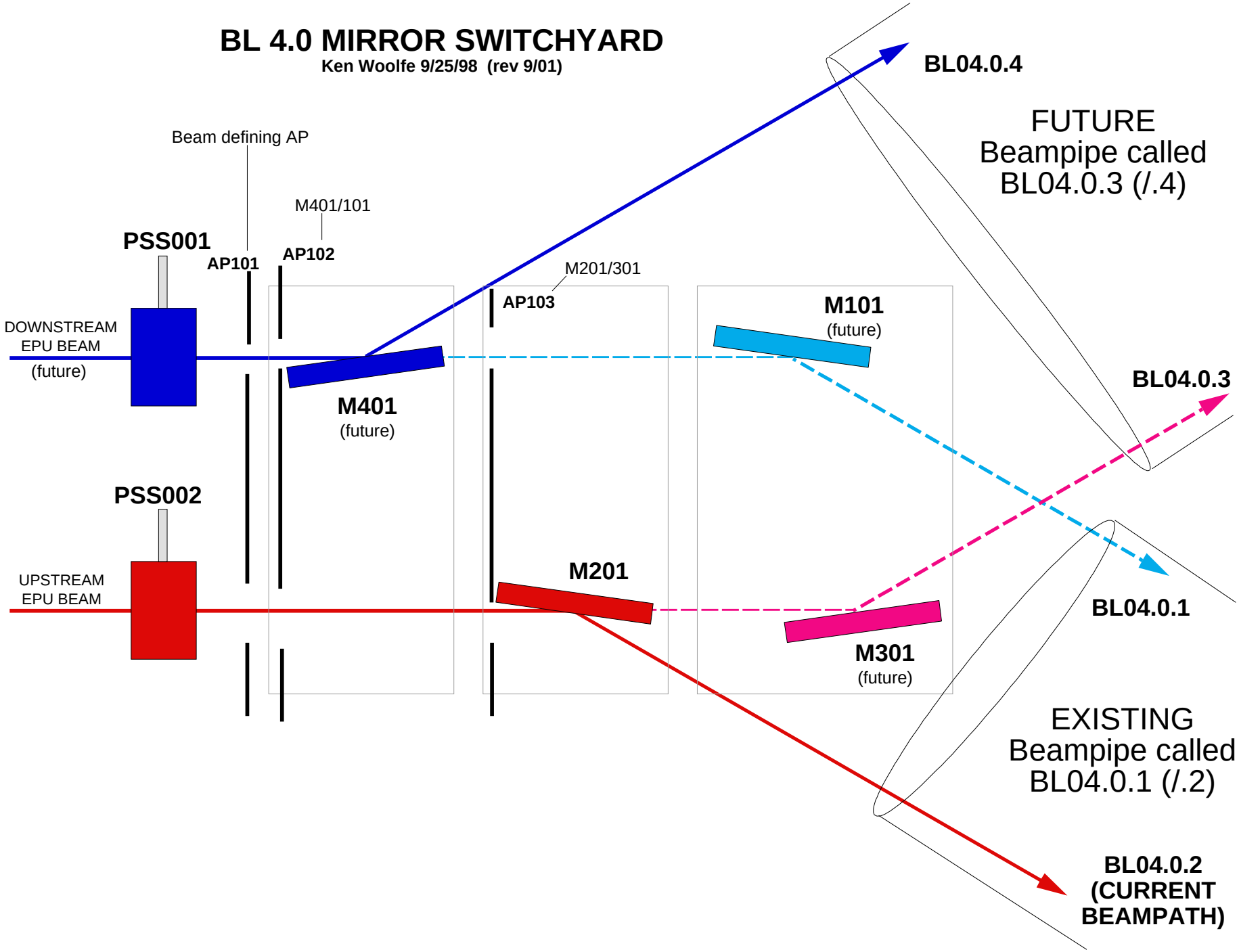

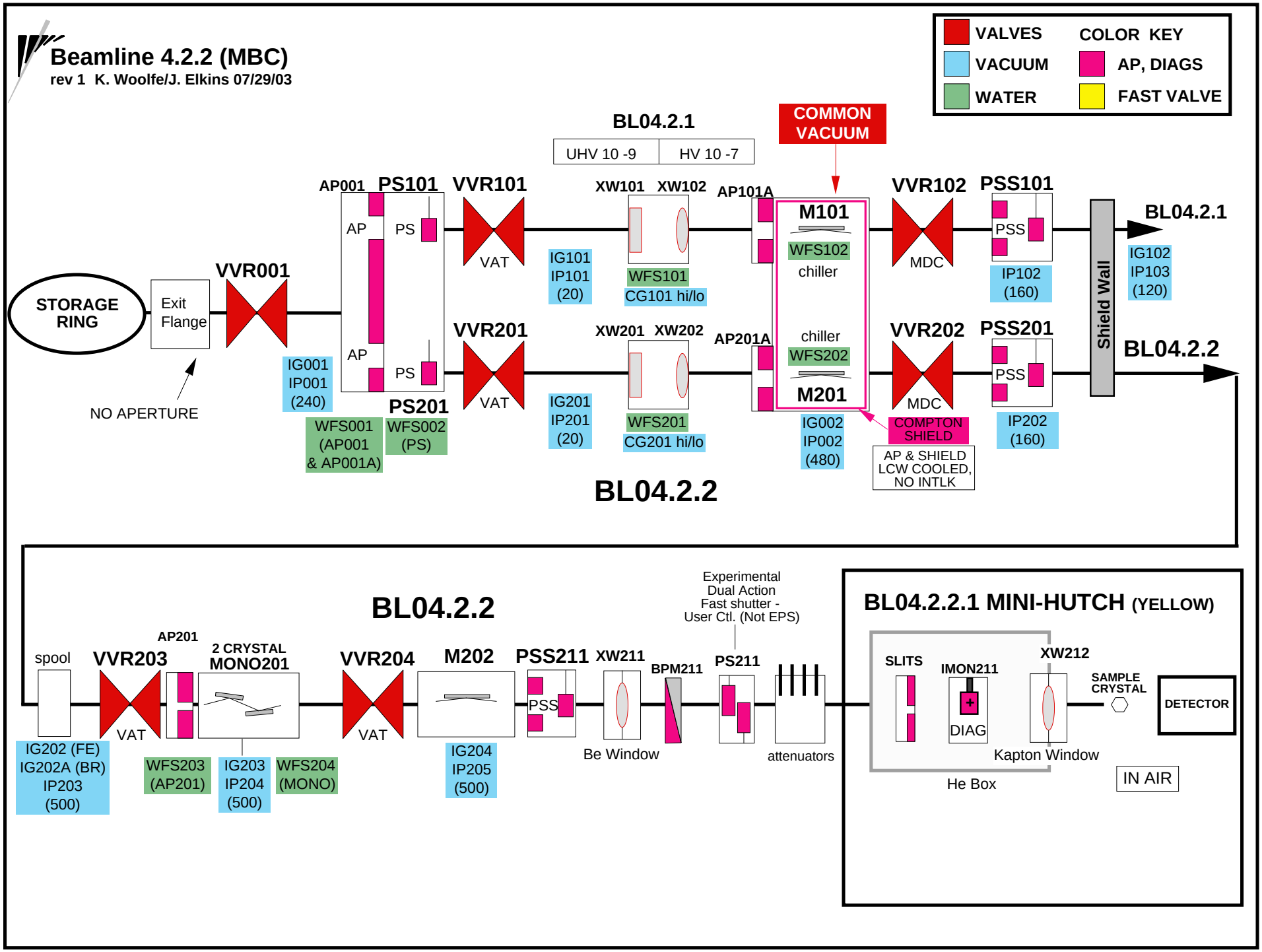
Beamline 4.2.2 (MBC)
rev 1 K. Woolfe/J. Elkins 07/29/03
VALVES
VACUUM
WATER
COLOR KEY
AP, DIAGS
FAST VALVE
BL04.2.1
UHV 10 -9
HV 10 -7
COMMON VACUUM
STORAGE RING
Exit Flange
NO APERTURE
VVR001
IG001
IP001
(240)
AP001
PS101
AP
PS
AP
PS
PS201
WFS001
(AP001
& AP001A)
WFS002
(PS)
VVR101
VAT
VVR201
VAT
IG101
IP101
(20)
IG201
IP201
(20)
XW101
XW102
WFS101
CG101 hi/lo
XW201
XW202
WFS201
CG201 hi/lo
AP101A
AP201A
M101
WFS102
chiller
chiller
WFS202
M201
IG002
IP002
(480)
COMPTON SHIELD
AP & SHIELD
LCW COOLED,
NO INTLK
VVR102
MDC
VVR202
MDC
PSS101
PSS
IP102
(160)
PSS201
PSS
IP202
(160)
Shield Wall
BL04.2.1
IG102
IP103
(120)
BL04.2.2
BL04.2.2
spool
VVR203
VAT
AP201
2 CRYSTAL
MONO201
IG202 (FE)
IG202A (BR)
IP203
(500)
WFS203
(AP201)
IG203
IP204
(500)
WFS204
(MONO)
VVR204
VAT
M202
IG204
IP205
(500)
PSS211
PSS
XW211
Be Window
BPM211
Experimental
Dual Action
Fast shutter -
User Ctl. (Not EPS)
PS211
attenuators
BL04.2.2.1 MINI-HUTCH (YELLOW)
SLITS
IMON211
DIAG
XW212
Kapton Window
He Box
SAMPLE CRYSTAL
DETECTOR
IN AIR

Beamline 4.3 FE

rev 0 K. Woolfe/J. Elkins 1/30/03

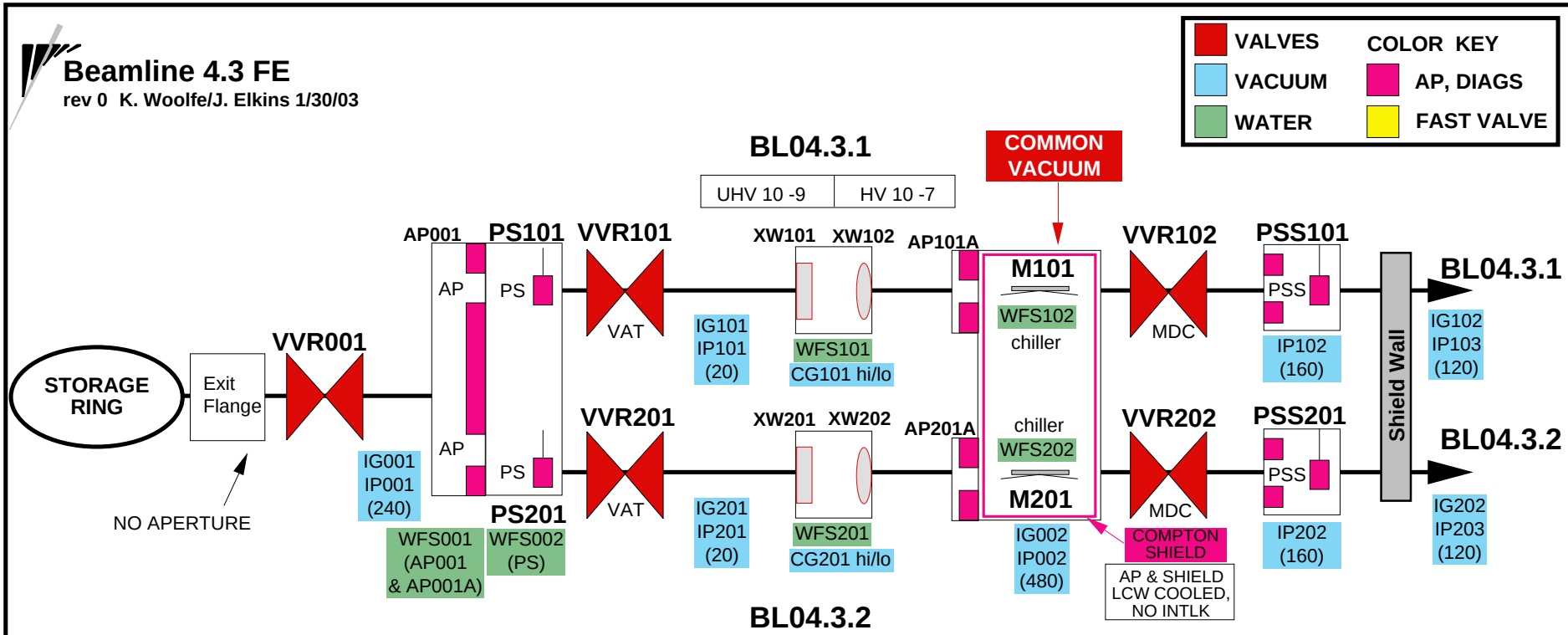

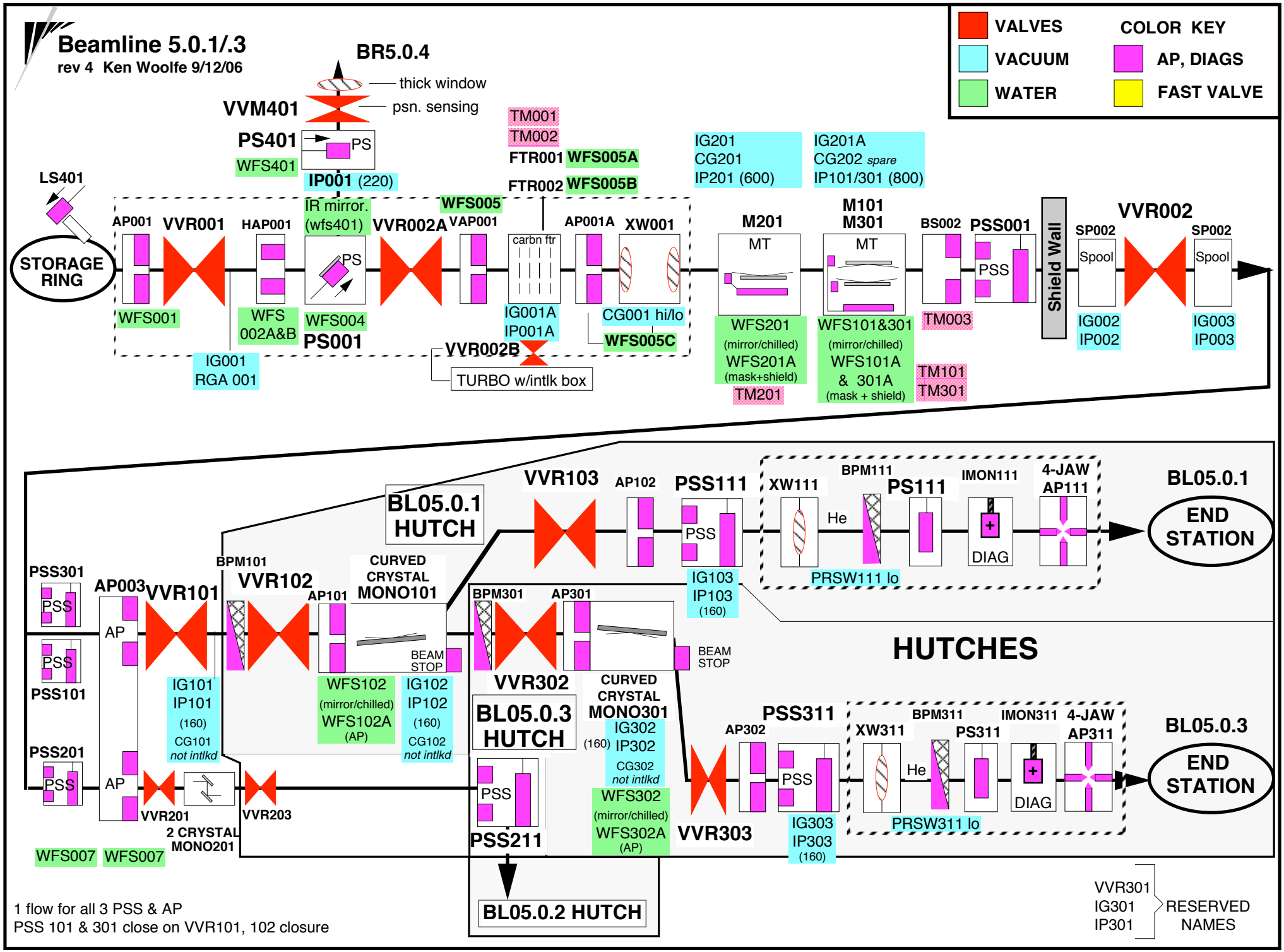
Beamline 5.0.1/.3
rev 4 Ken Woolfe 9/12/06
VALVES
VACUUM
WATER
COLOR KEY
AP, DIAGS
FAST VALVE
BR5.0.4
thick window
psn. sensing
VVM401
PS401
PS
WFS401
IP001 (220)
LS401
STORAGE RING
AP001
VVR001
HAP001
IR mirror. (wfs401)
VVR002A
WFS005
VAP001
TM001
TM002
FTR001
WFS005A
FTR002
WFS005B
carbn ftr
AP001A
XW001
IG201
CG201
IP201 (600)
IG201A
CG202 spare
IP101/301 (800)
M201
MT
M101
M301
BS002
PSS001
Shield Wall
SP002
Spool
VVR002
WFS001
WFS 002A&B
WFS004
PS001
IG001
RGA 001
IG001A
IP001A
VVR002B
TURBO w/intlk box
CG001 hi/lo
WFS005C
WFS201
(mirror/chilled)
WFS201A
(mask+shield)
TM201
WFS101&301
(mirror/chilled)
WFS101A
& 301A
(mask + shield)
TM101
TM301
TM003
IG002
IP002
IG003
IP003
BL05.0.1 HUTCH
VVR103
AP102
PSS111
XW111
BPM111
PS111
IMON111
4-JAW
AP111
BL05.0.1
END STATION
He
DIAG
PRSW111 lo
IG103
IP103
(160)
PSS301
PSS
AP003
VVR101
BPM101
VVR102
AP101
CURVED CRYSTAL MONO101
BPM301
AP301
BEAM STOP
HUTCHES
PSS101
AP
IG101
IP101
(160)
CG101
not intlkd
WFS102
(mirror/chilled)
WFS102A
(AP)
IG102
IP102
(160)
CG102
not intlkd
VVR302
BL05.0.3 HUTCH
CURVED CRYSTAL MONO301
IG302
IP302
(160)
CG302
not intlkd
WFS302
(mirror/chilled)
WFS302A
(AP)
PSS311
AP302
XW311
BPM311
PS311
IMON311
4-JAW
AP311
BL05.0.3
END STATION
PSS201
VVR201
VVR203
2 CRYSTAL MONO201
PSS211
VVR303
IG303
IP303
(160)
PRSW311 lo
WFS007
WFS007
BL05.0.2 HUTCH
1 flow for all 3 PSS & AP
PSS 101 & 301 close on VVR101, 102 closure
VVR301
IG301
IP301
RESERVED NAMES

Beamline 5.0.2

rev 18 Ken Woolfe 12/19/06

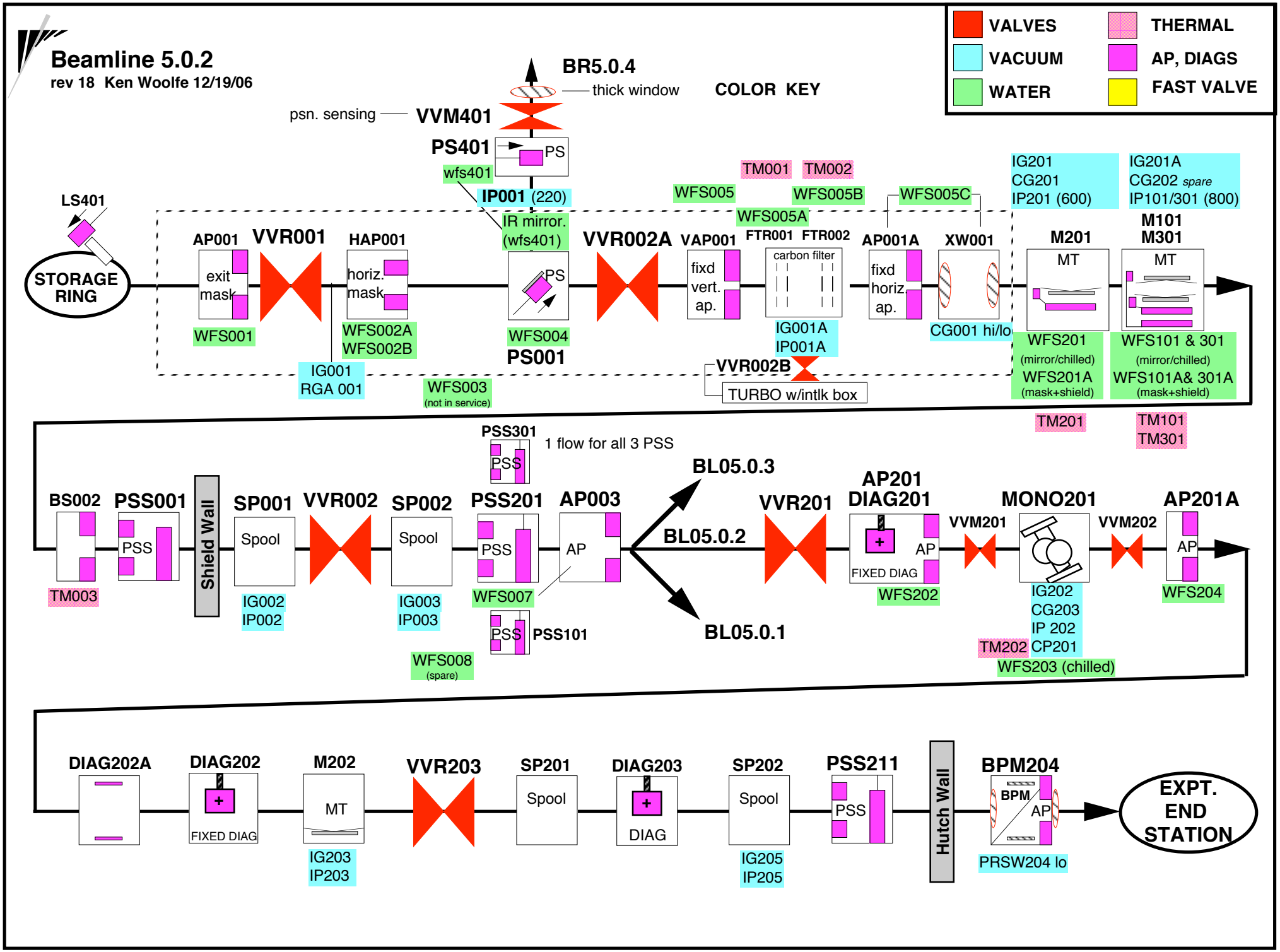

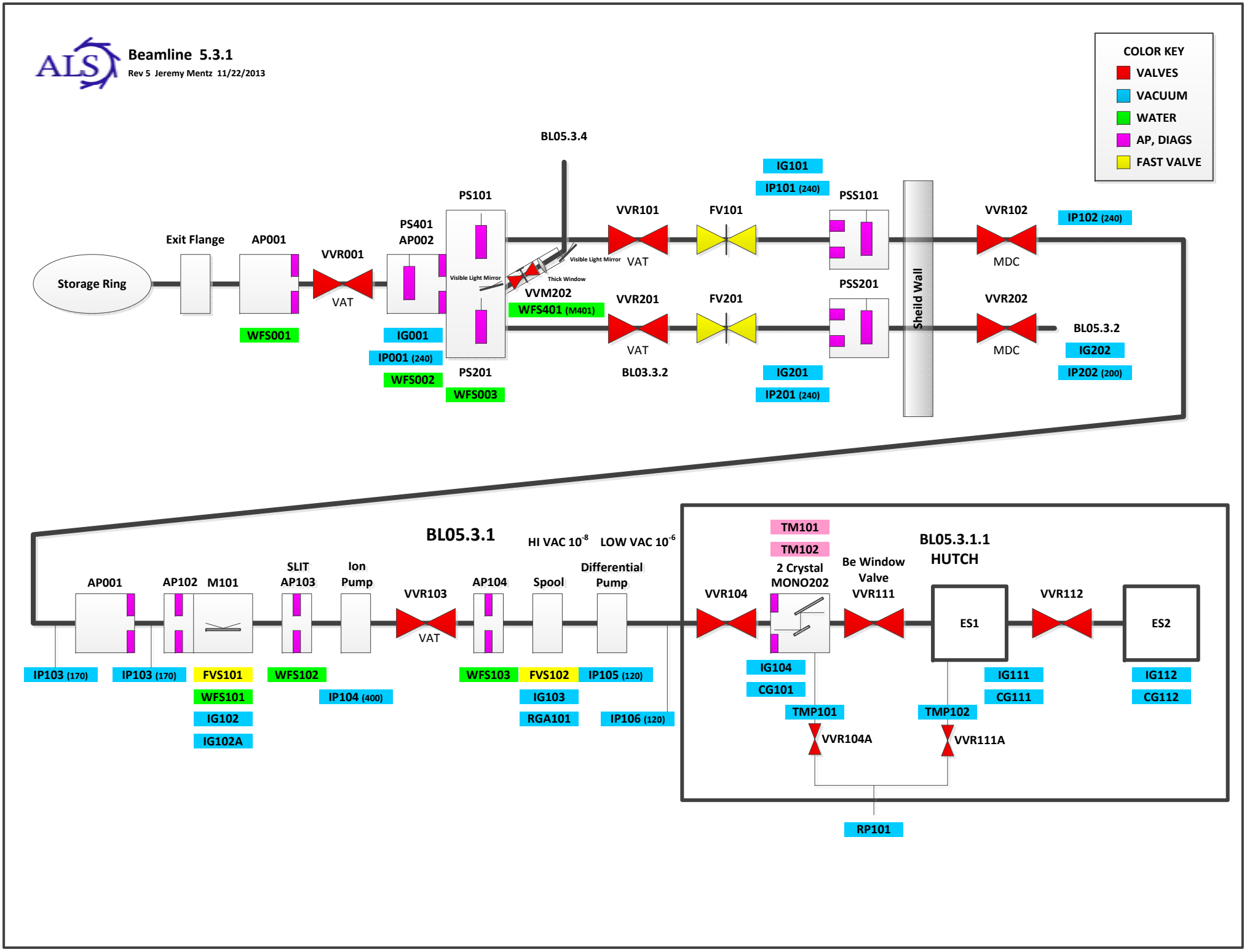
Beamline 5.3.1
Rev 5 Jeremy Mentz 11/22/2013
COLOR KEY
VALVES
VACUUM
WATER
AP, DIAGS
FAST VALVE
BL05.3.4
Storage Ring
Exit Flange
AP001
WFS001
VVR001
VAT
PS401
AP002
IG001
IP001 (240)
WFS002
PS101
Visible Light Mirror
PS201
WFS003
Visible Light Mirror
Thick Window
VVM202
WFS401 (M401)
VVR101
VAT
VVR201
VAT
BL03.3.2
FV101
FV201
IG101
IP101 (240)
IG201
IP201 (240)
PSS101
PSS201
Sheild Wall
VVR102
MDC
VVR202
MDC
IP102 (240)
BL05.3.2
IG202
IP202 (200)
BL05.3.1
AP001
IP103 (170)
AP102
IP103 (170)
M101
FVS101
WFS101
IG102
IG102A
SLIT
AP103
WFS102
Ion
Pump
IP104 (400)
VVR103
VAT
AP104
WFS103
HI VAC 10-8
Spool
FVS102
IG103
RGA101
LOW VAC 10-6
Differential
Pump
IP105 (120)
IP106 (120)
BL05.3.1.1
HUTCH
VVR104
TM101
TM102
2 Crystal
MONO202
IG104
CG101
TMP101
VVR104A
Be Window
Valve
VVR111
TMP102
VVR111A
ES1
IG111
CG111
VVR112
ES2
IG112
CG112
RP101

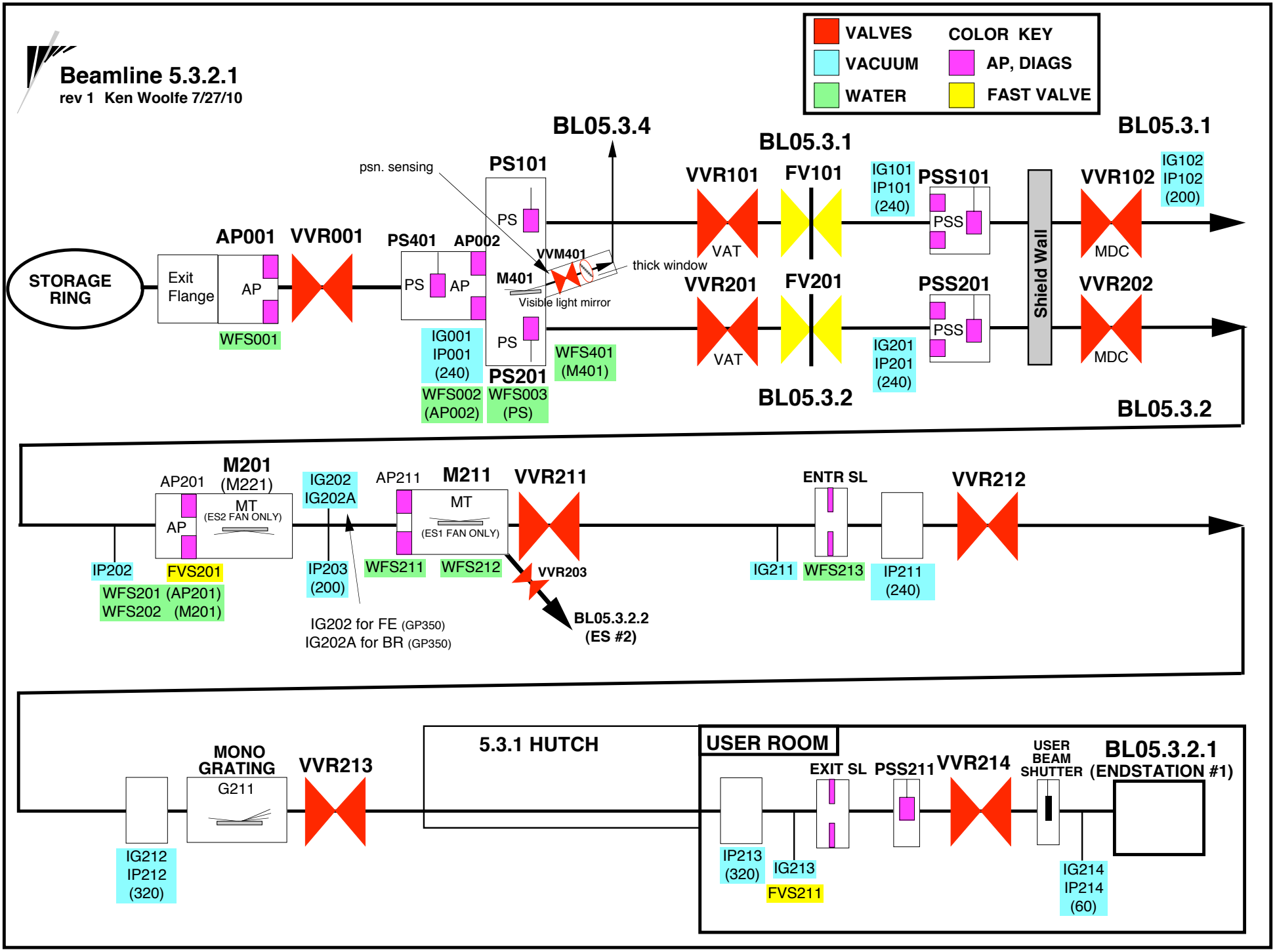
Beamline 5.3.2.1
rev 1 Ken Woolfe 7/27/10
VALVES
VACUUM
WATER
COLOR KEY
AP, DIAGS
FAST VALVE
STORAGE RING
Exit Flange
AP
AP001
VVR001
WFS001
PS401
AP002
PS
AP
IG001
IP001
(240)
WFS002
(AP002)
psn. sensing
PS101
PS
M401
VVM401
Visible light mirror
thick window
PS
PS201
WFS003
(PS)
WFS401
(M401)
BL05.3.4
BL05.3.1
VVR101
VAT
FV101
IG101
IP101
(240)
PSS101
PSS
VVR201
VAT
FV201
IG201
IP201
(240)
PSS201
PSS
BL05.3.2
Shield Wall
VVR102
MDC
IG102
IP102
(200)
VVR202
MDC
BL05.3.1
BL05.3.2
AP201
M201
(M221)
MT
(ES2 FAN ONLY)
AP
IP202
FVS201
WFS201 (AP201)
WFS202 (M201)
IG202
IG202A
IP203
(200)
IG202 for FE (GP350)
IG202A for BR (GP350)
AP211
M211
MT
(ES1 FAN ONLY)
WFS211
WFS212
VVR211
VVR203
BL05.3.2.2
(ES #2)
ENTR SL
IG211
WFS213
IP211
(240)
VVR212
MONO
GRATING
G211
IG212
IP212
(320)
VVR213
5.3.1 HUTCH
USER ROOM
IP213
(320)
IG213
FVS211
EXIT SL
PSS211
VVR214
USER
BEAM
SHUTTER
IG214
IP214
(60)
BL05.3.2.1
(ENDSTATION #1)

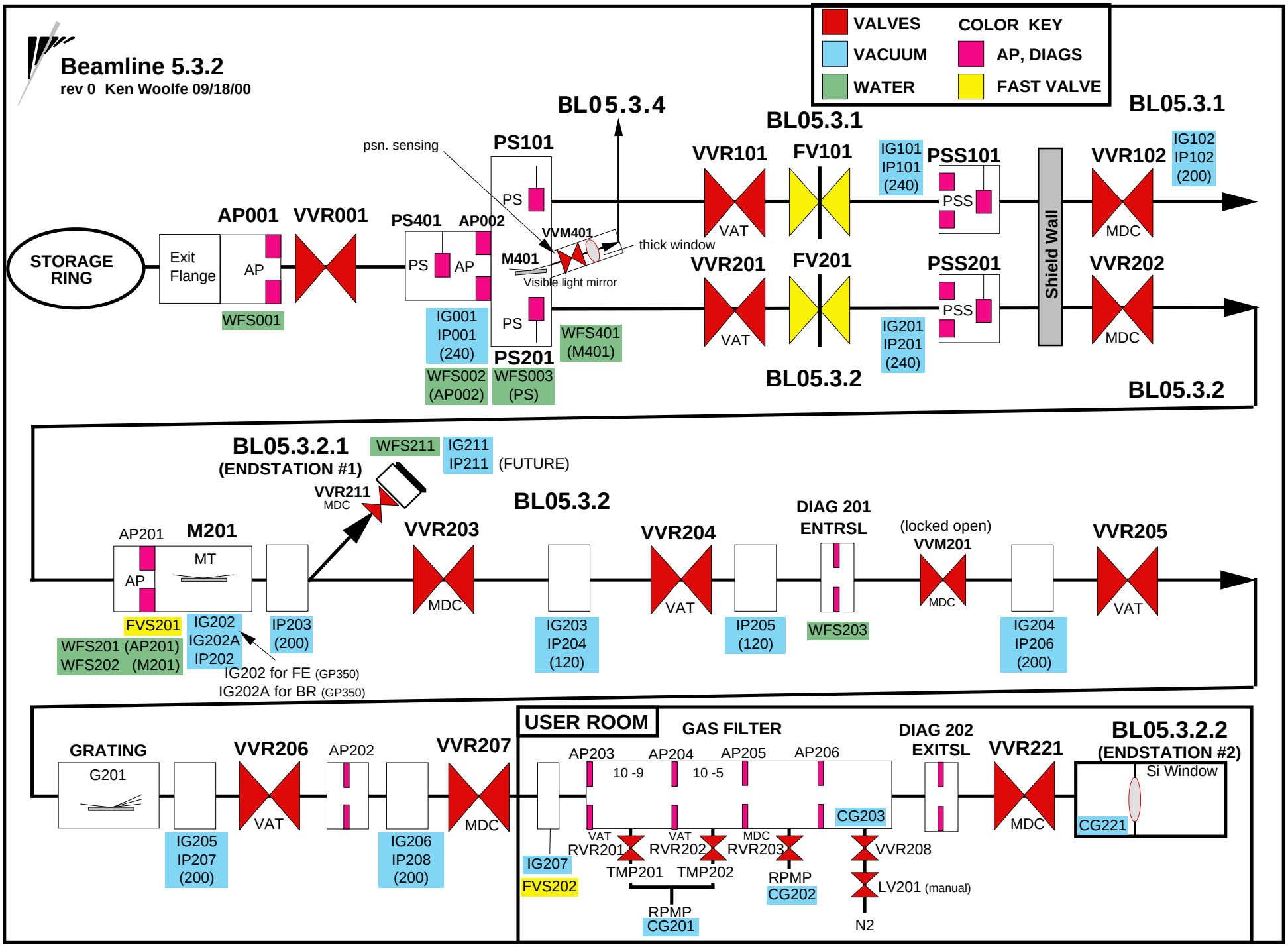
Beamline 5.3.2
rev 0 Ken Woolfe 09/18/00
VALVES
VACUUM
WATER
COLOR KEY
AP, DIAGS
FAST VALVE
BL05.3.4
BL05.3.1
BL05.3.1
psn. sensing
PS101
VVR101
FV101
IG101
IP101
(240)
PSS101
VVR102
IG102
IP102
(200)
STORAGE RING
Exit Flange
AP
AP001
VVR001
PS401
AP002
PS
AP
VVM401
M401
thick window
Visible light mirror
VAT
PSS
Shield Wall
MDC
VVR201
FV201
PSS201
VVR202
WFS001
IG001
IP001
(240)
WFS002
(AP002)
WFS003
(PS)
WFS401
(M401)
PS201
IG201
IP201
(240)
BL05.3.2
BL05.3.2
BL05.3.2.1
(ENDSTATION #1)
WFS211
IG211
IP211
(FUTURE)
VVR211
MDC
BL05.3.2
AP201
M201
MT
VVR203
VVR204
DIAG 201
ENTRSL
(locked open)
VVM201
VVR205
FVS201
WFS201 (AP201)
WFS202 (M201)
IG202
IG202A
IP202
IP203
(200)
IG202 for FE (GP350)
IG202A for BR (GP350)
IG203
IP204
(120)
IP205
(120)
WFS203
IG204
IP206
(200)
GRATING
G201
VVR206
AP202
VVR207
IG205
IP207
(200)
IG206
IP208
(200)
USER ROOM
GAS FILTER
AP203
AP204
AP205
AP206
10 -9
10 -5
CG203
DIAG 202
EXITSL
VVR221
BL05.3.2.2
(ENDSTATION #2)
Si Window
CG221
IG207
FVS202
RVR201
RVR202
RVR203
TMP201
TMP202
RPMP
CG201
RPMP
CG202
VVR208
LV201 (manual)
N2

Beamline 5.4 (IR) EPS dwg.

Rev 1 J Mentz 7/13/12

NOTES: ALL FAULTS LATCH IN FE EPS; KEY ACCESS
EPS will be part of front-end; no separate branchline EPS
1) EPS controls M101
M101 default condition is in beam.
M101 should not be moved with beam on.
Pop-up warning displayed when someone tries to move mirror.
2) WFS101 fault or M101 movement kills SR RF.
3) VVR101 has standard interlocks to IG 101 & 102.

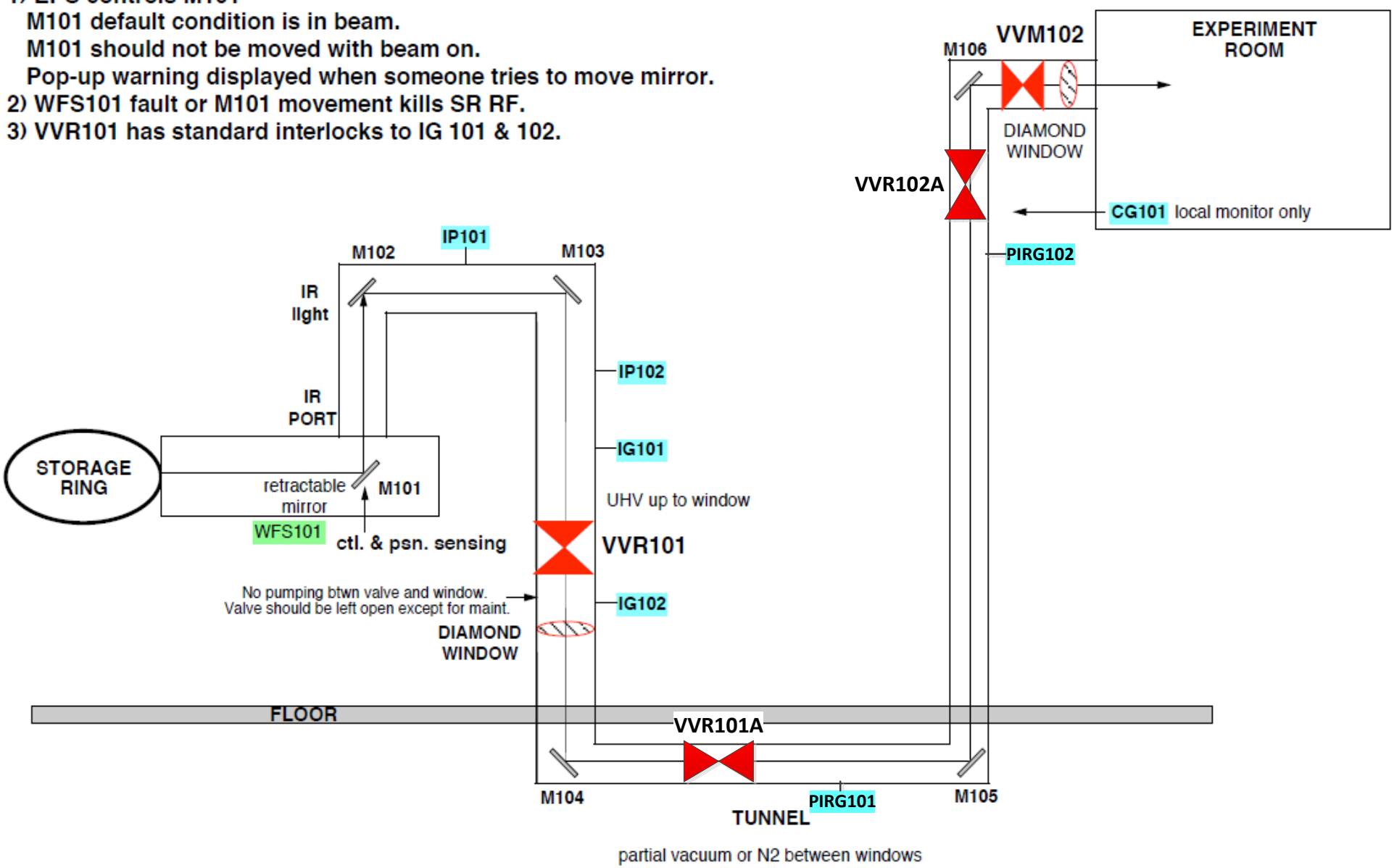

Beamline 6.0.1 (Hard X-ray) EPS dwg.
(with separate insertion device)

rev 9 J. Mentz 04/04/2013

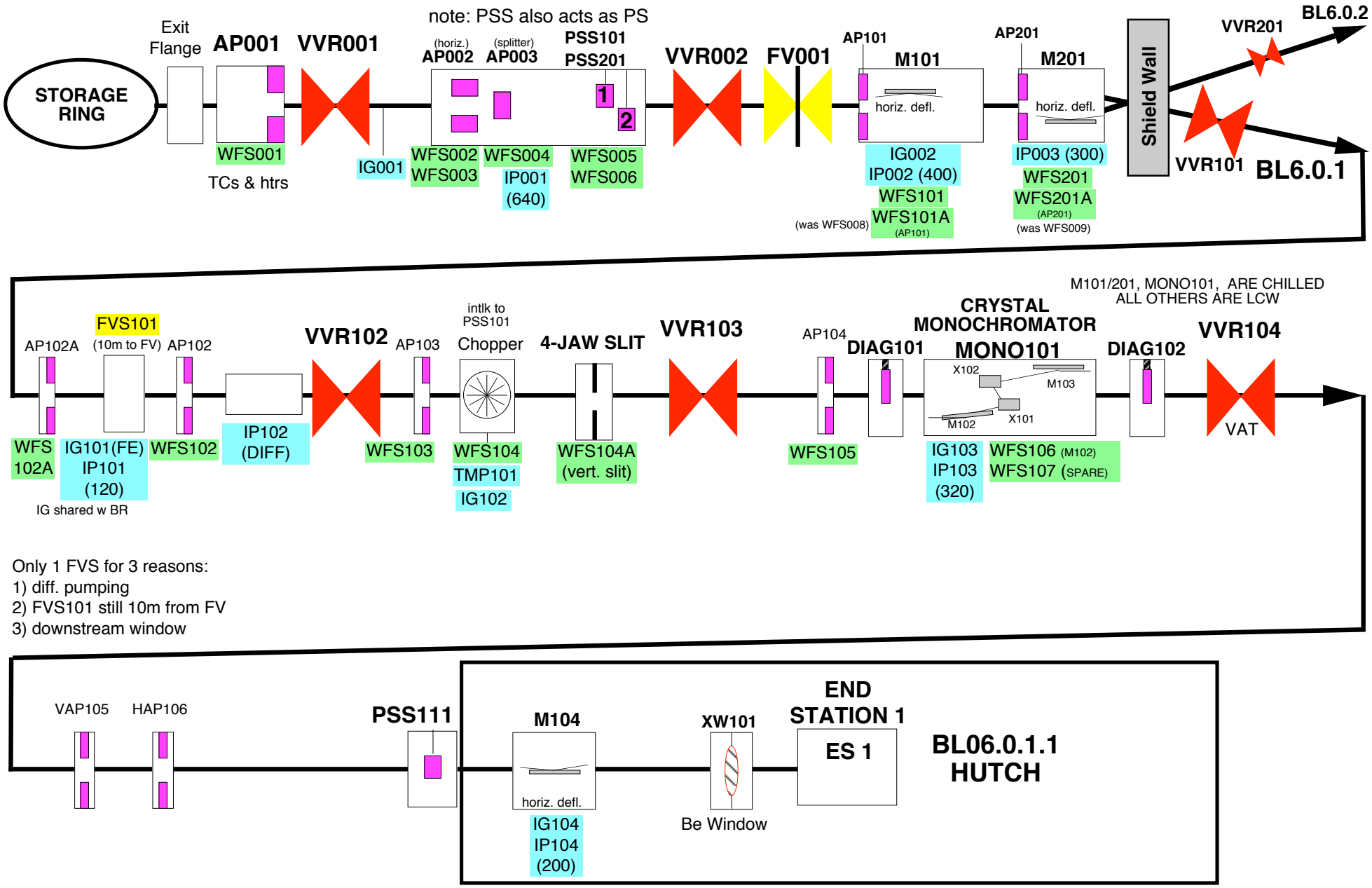

Beamline 6.0.2 (Soft X-ray) EPS dwg.
(with separate insertion device)

rev 9 J. Mentz 04/2/2013

COLOR KEY
- VALVES
- VACUUM GAUGES & PUMPS
- APERTURES, STOPS, DIAGS
- FAST VALVE & SENSORS
- WATER FLOW SWS.

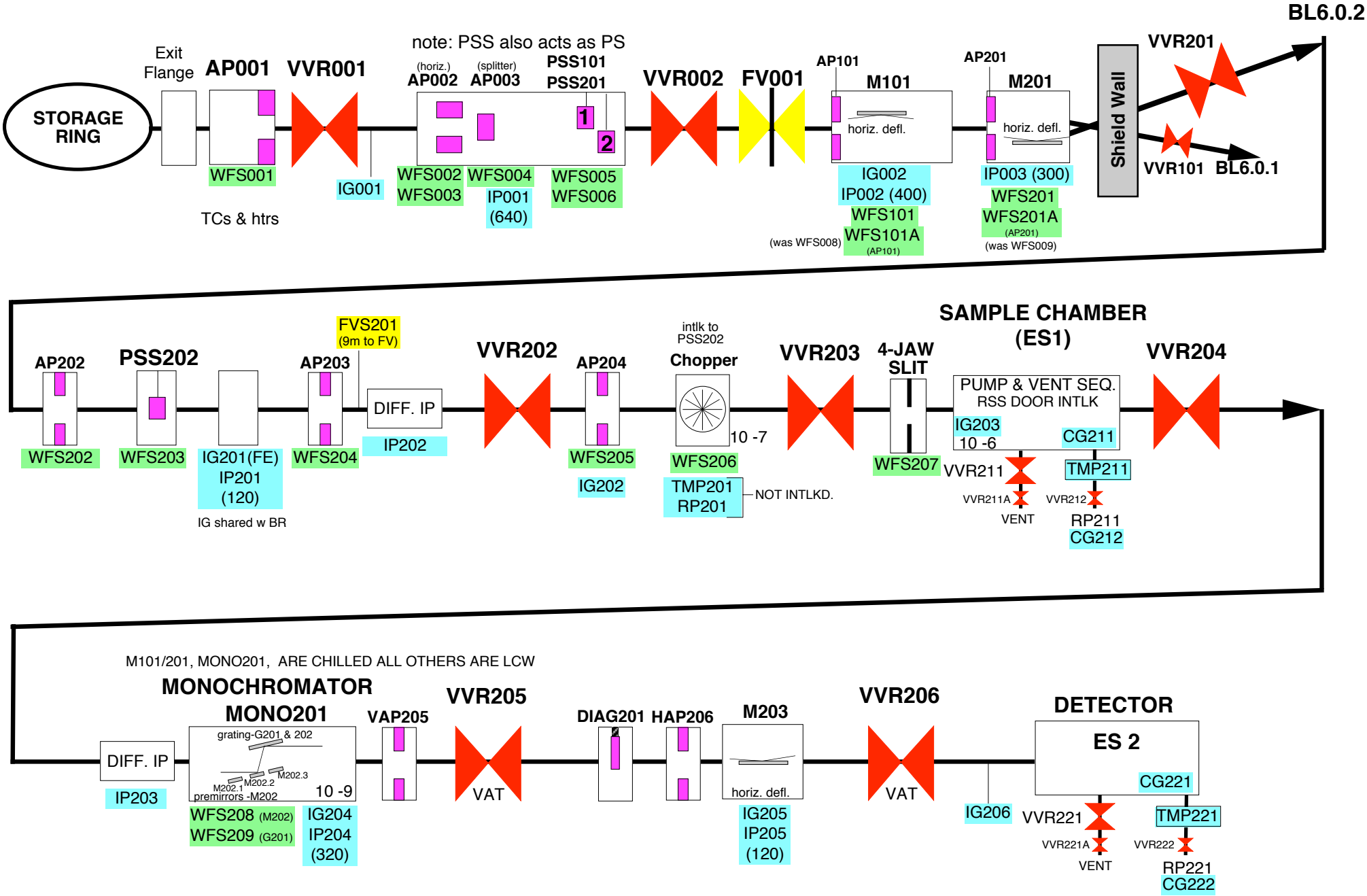

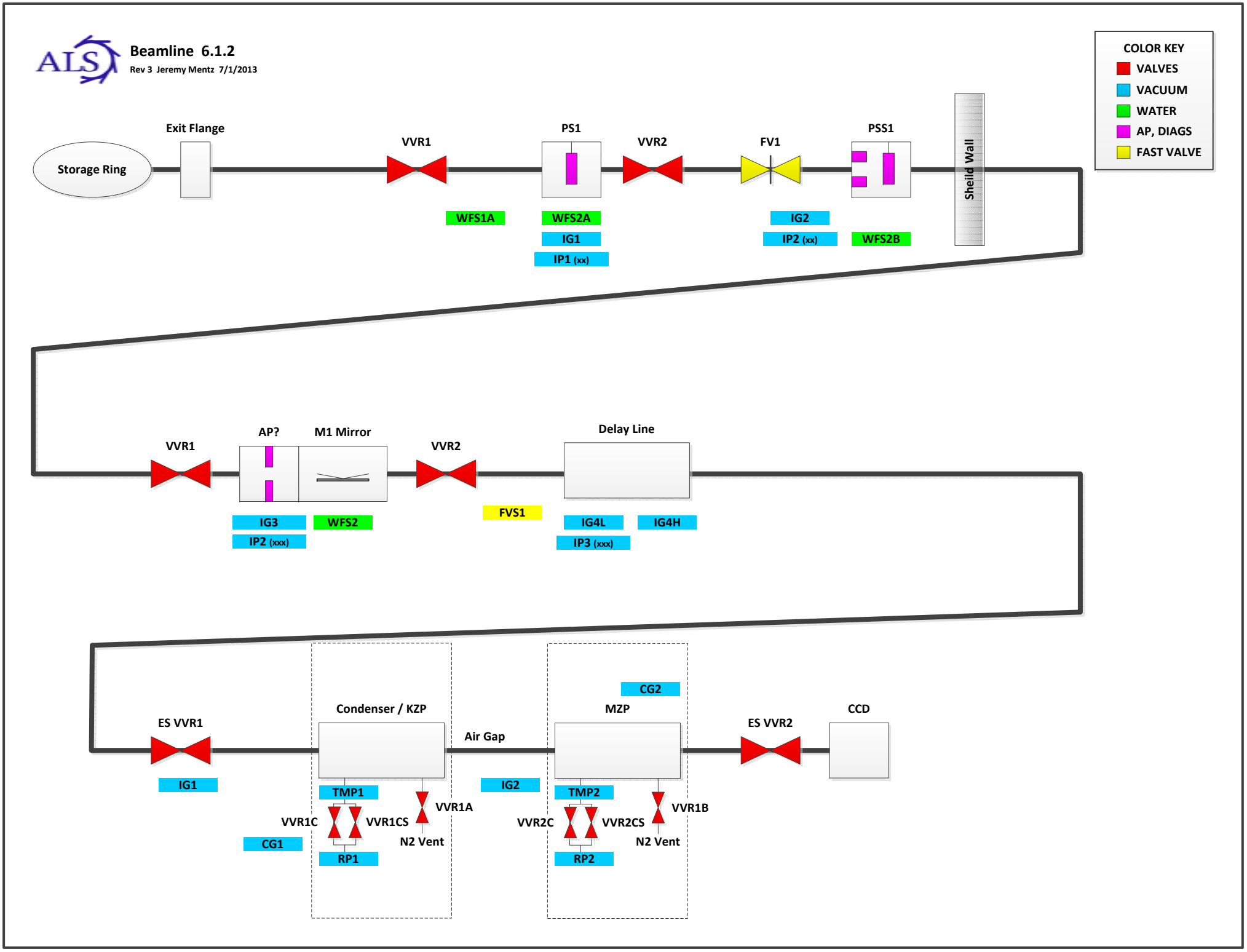
Beamline 6.1.2
Rev 3 Jeremy Mentz 7/1/2013
COLOR KEY
VALVES
VACUUM
WATER
AP, DIAGS
FAST VALVE
Storage Ring
Exit Flange
VVR1
PS1
VVR2
FV1
PSS1
Sheild Wall
WFS1A
WFS2A
IG1
IP1 (xx)
IG2
IP2 (xx)
WFS2B
VVR1
AP?
M1 Mirror
VVR2
Delay Line
IG3
IP2 (xxx)
WFS2
FVS1
IG4L
IP3 (xxx)
IG4H
ES VVR1
Condenser / KZP
Air Gap
CG2
MZP
ES VVR2
CCD
IG1
TMP1
VVR1C
VVR1CS
VVR1A
CG1
N2 Vent
RP1
IG2
TMP2
VVR2C
VVR2CS
VVR1B
N2 Vent
RP2

Beamline 6.3.1

rev 2 9/3/10 Ken Woolfe

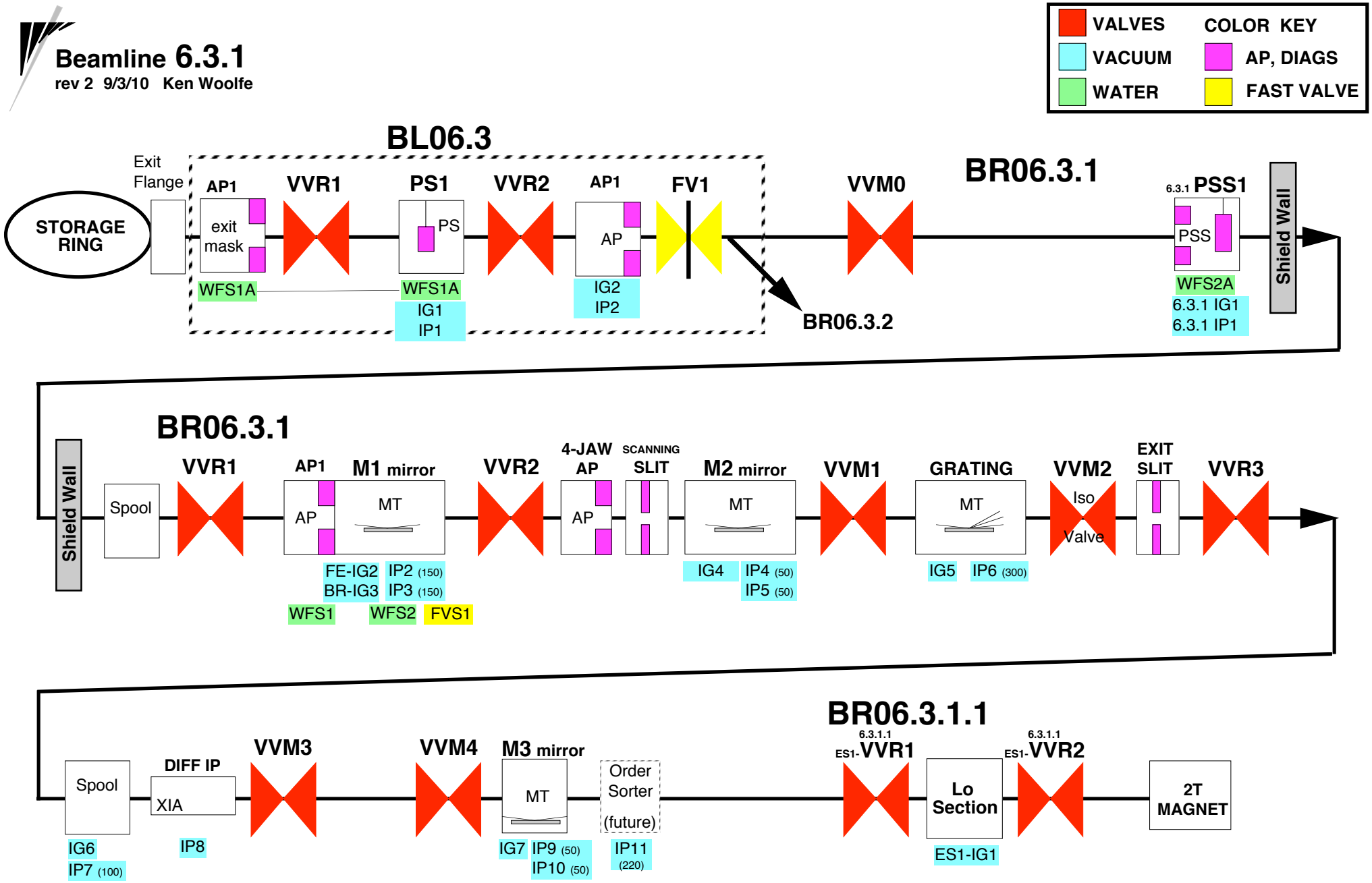

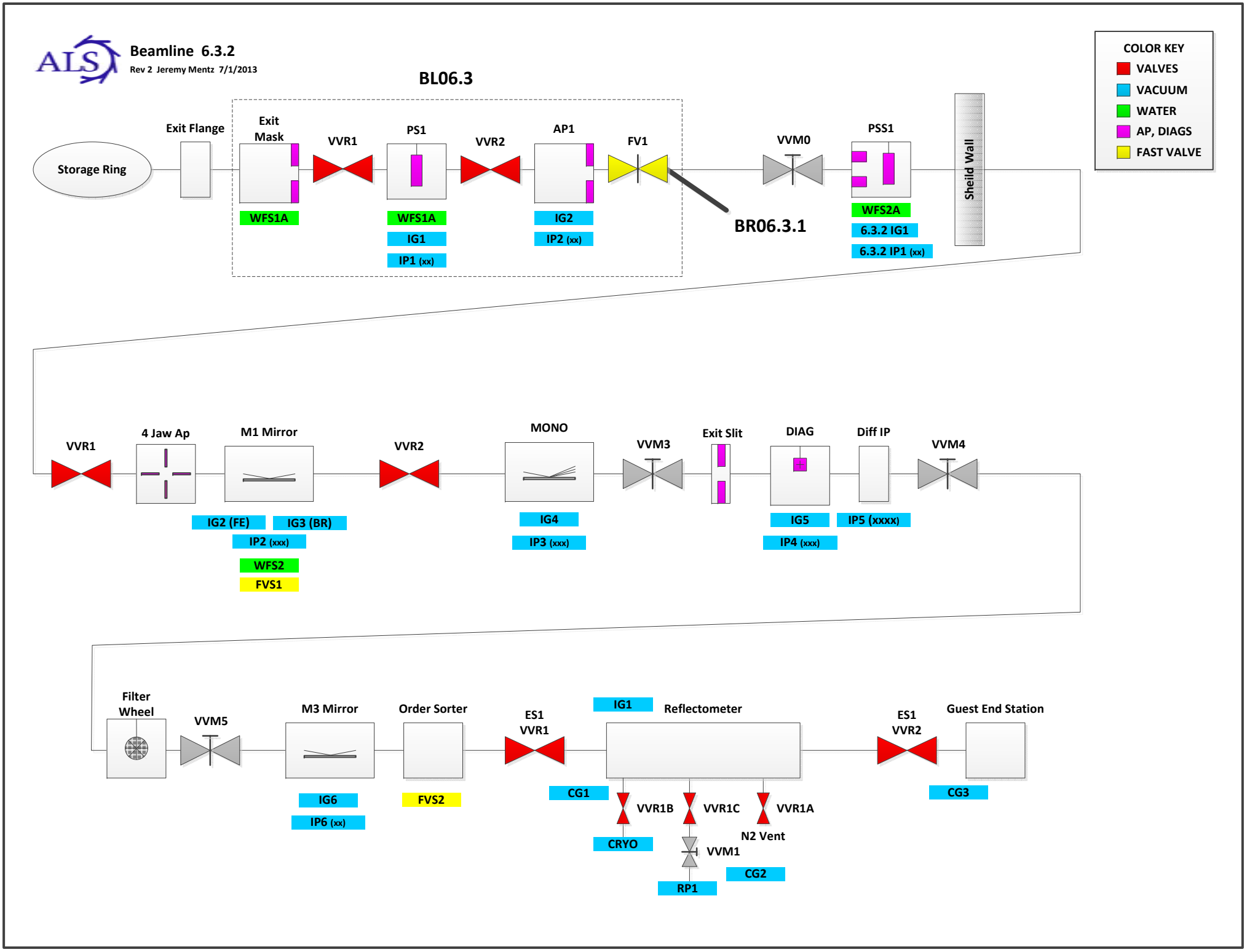
Beamline 6.3.2
Rev 2 Jeremy Mentz 7/1/2013
BL06.3
COLOR KEY
VALVES
VACUUM
WATER
AP, DIAGS
FAST VALVE
Storage Ring
Exit Flange
Exit Mask
VVR1
PS1
VVR2
AP1
FV1
VVM0
PSS1
Sheild Wall
WFS1A
WFS1A
IG1
IP1 (xx)
IG2
IP2 (xx)
BR06.3.1
WFS2A
6.3.2 IG1
6.3.2 IP1 (xx)
VVR1
4 Jaw Ap
M1 Mirror
VVR2
MONO
VVM3
Exit Slit
DIAG
Diff IP
VVM4
IG2 (FE)
IG3 (BR)
IP2 (xxx)
WFS2
FVS1
IG4
IP3 (xxx)
IG5
IP4 (xxx)
IP5 (xxxx)
Filter Wheel
VVM5
M3 Mirror
Order Sorter
ES1 VVR1
IG1
Reflectometer
ES1 VVR2
Guest End Station
IG6
IP6 (xx)
FVS2
CG1
VVR1B
VVR1C
VVR1A
CRYO
N2 Vent
VVM1
CG2
RP1
CG3

Beamline 7.0.2 MAESTRO

rev 1 Ken Woolfe 9/25/13

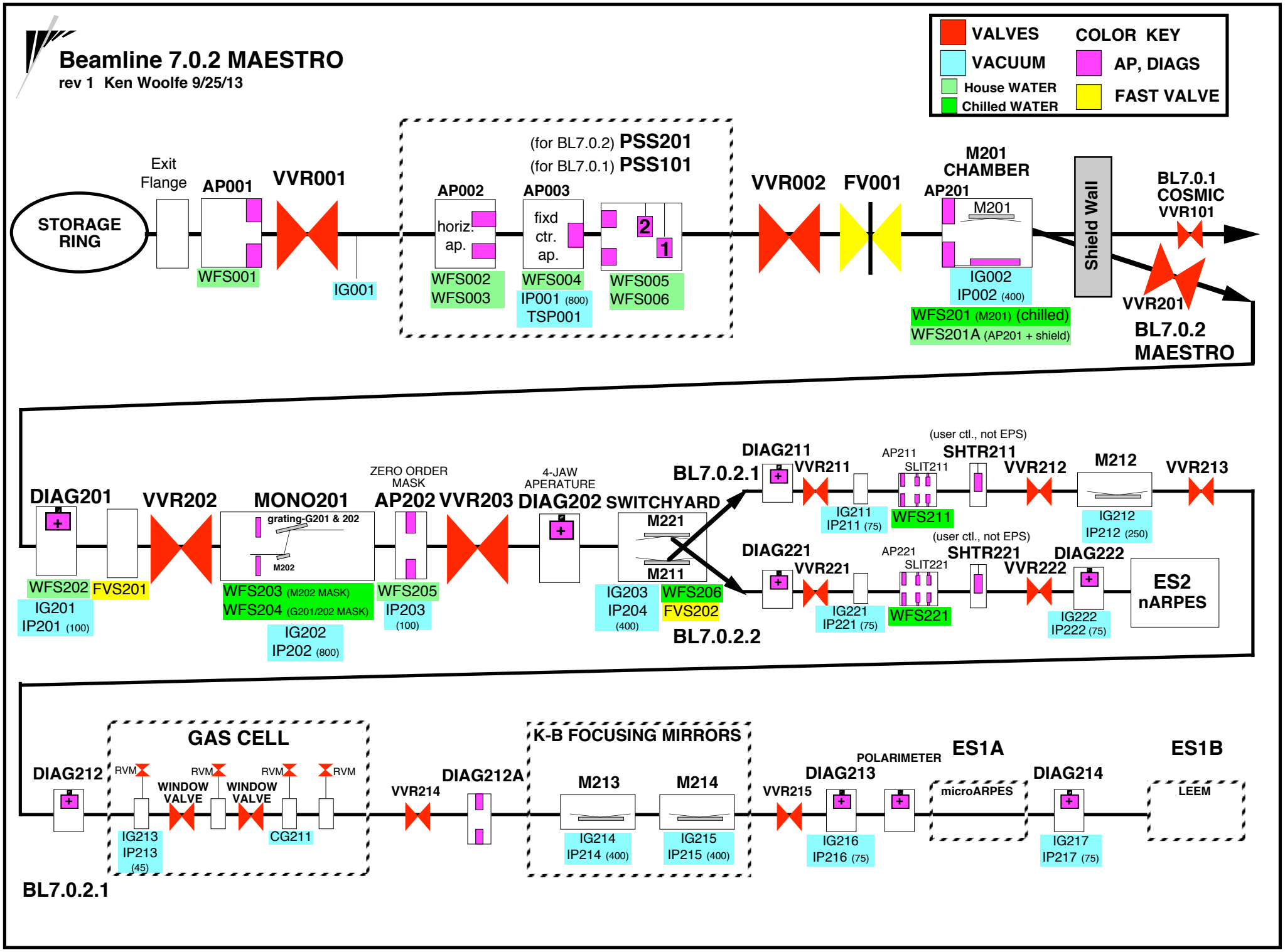

Beamline 7.2 (diag) EPS dwg.

rev 1 Ken Woolfe 3/14/05

COLOR KEY

- VALVES
- VACUUM GAUGES & PUMPS
- APERTURES, STOPS, DIAGS
- FAST VALVE & SENSORS
- WATER FLOW SWS.

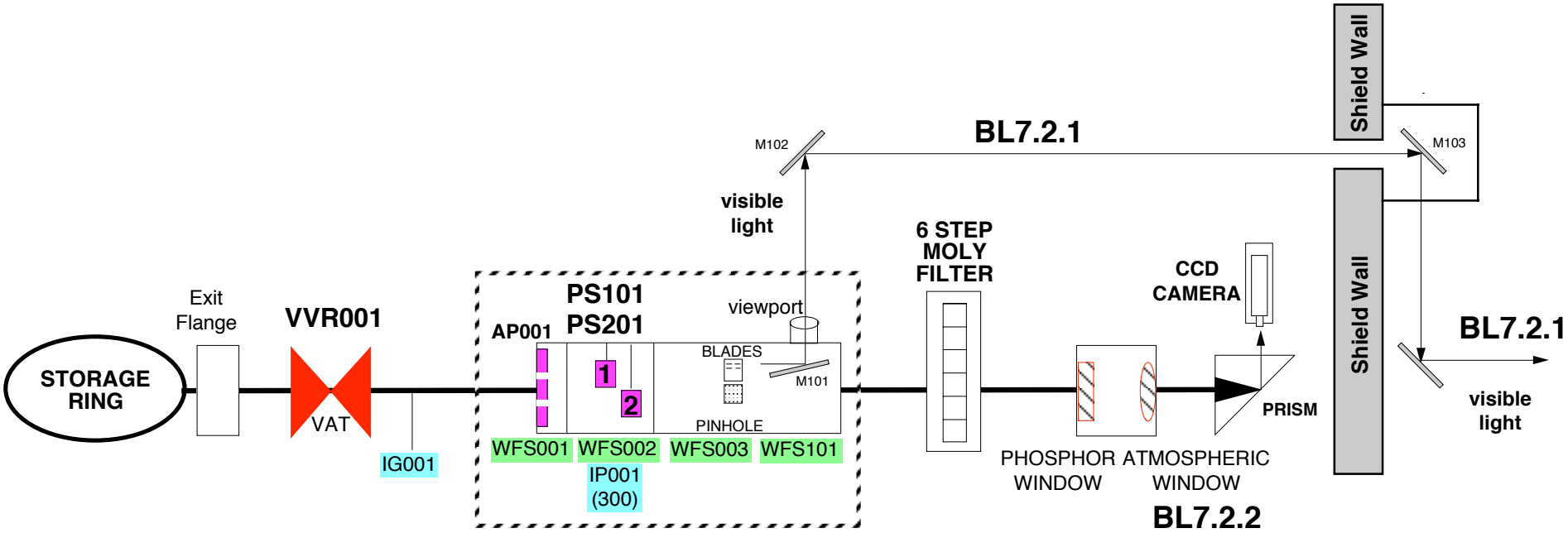

Ken Woolfe 9/20/2006
revised 10/04/2011

7.3.3

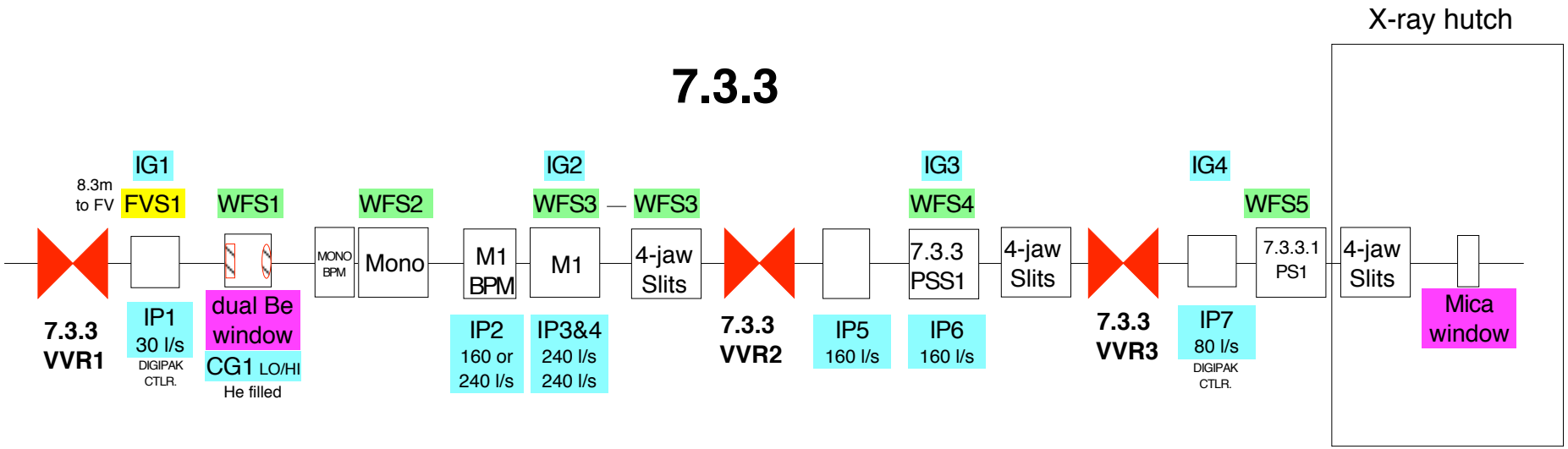

BL7.3

instrumentation
simplified dwg.

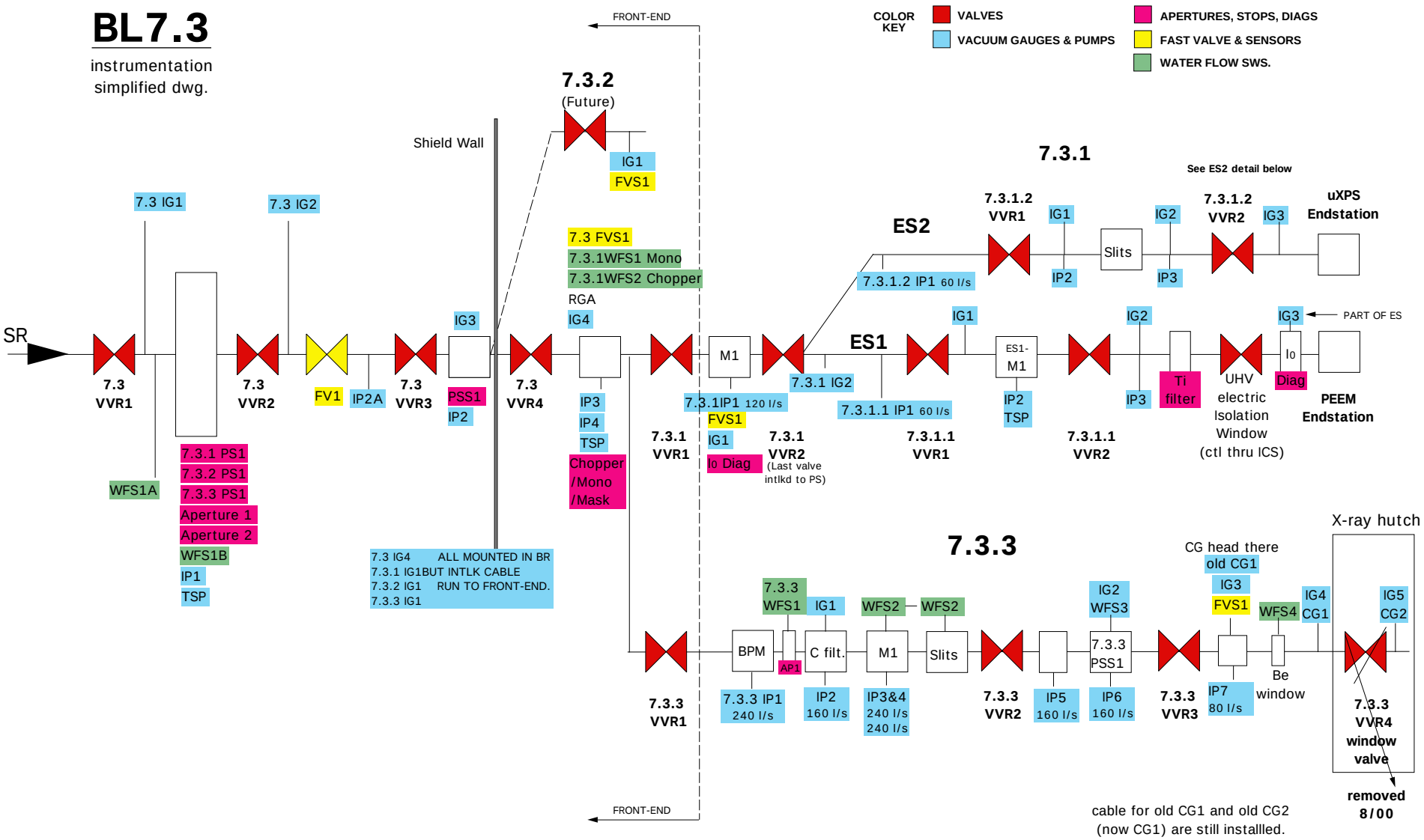

Ken Woolfe, updated 9/5/97
revised 8/22/00

Beamline 8.0.1

rev 2 Ken Woolfe 8/27/07

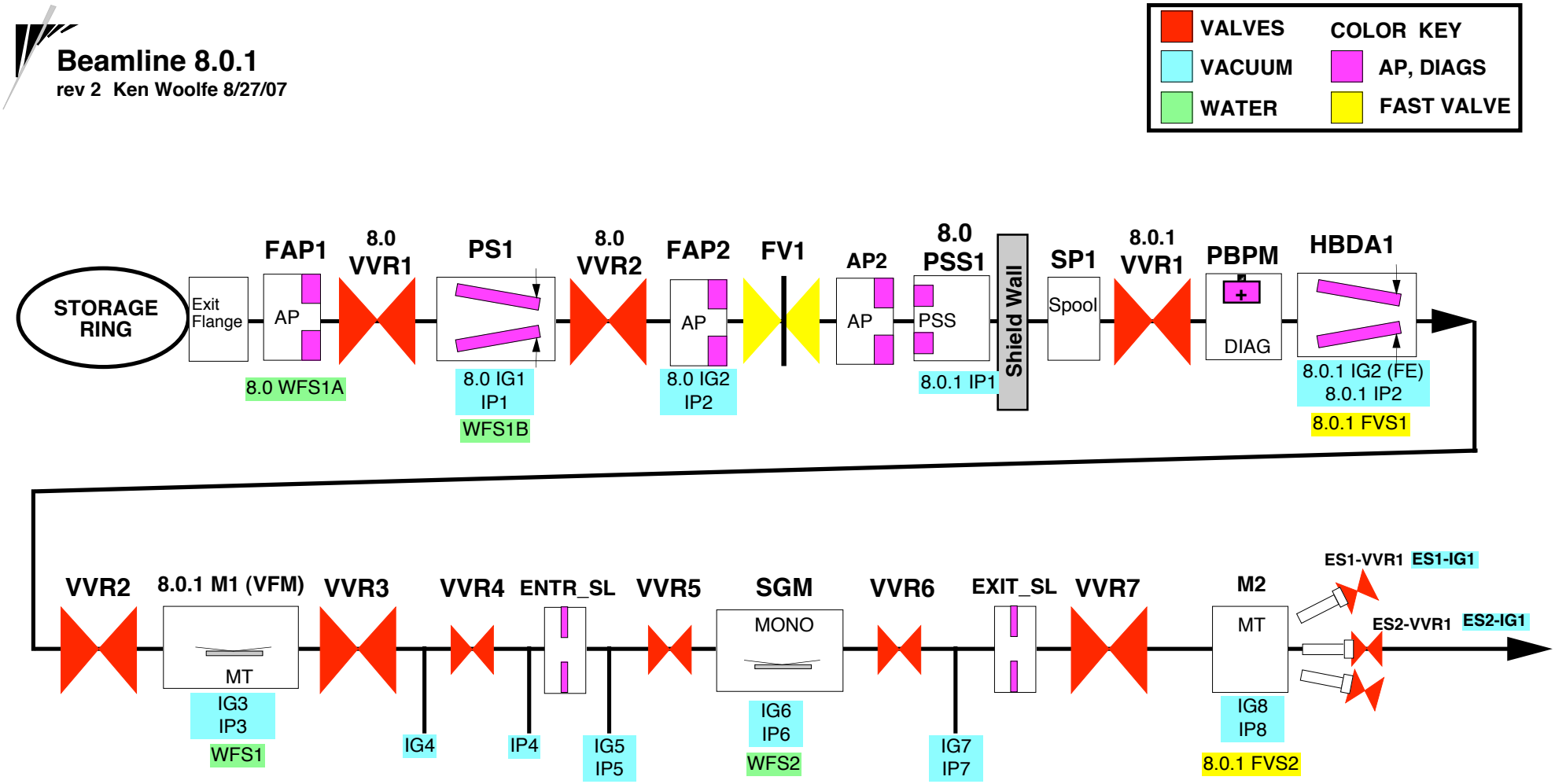

Beamline 8.2.1 (HHMI)

rev 07 C.Cork 2011-08-12

If either window leaks on upstrm side, other branch can continue running.

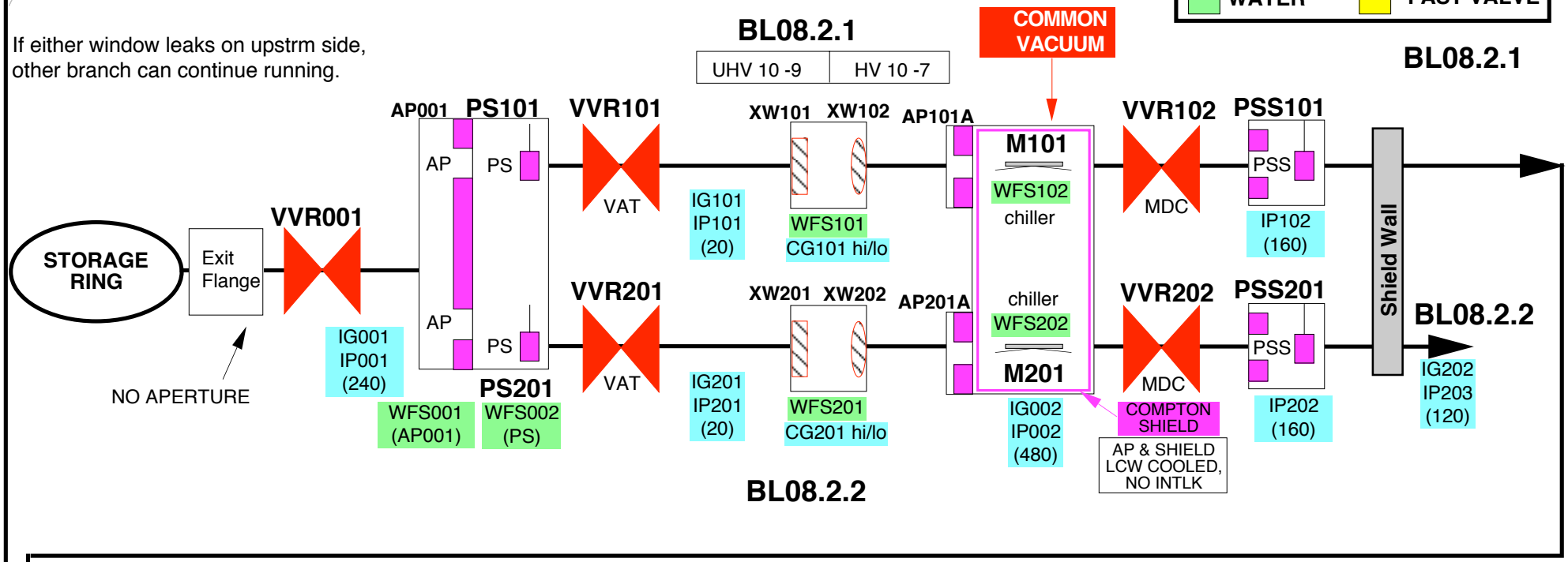

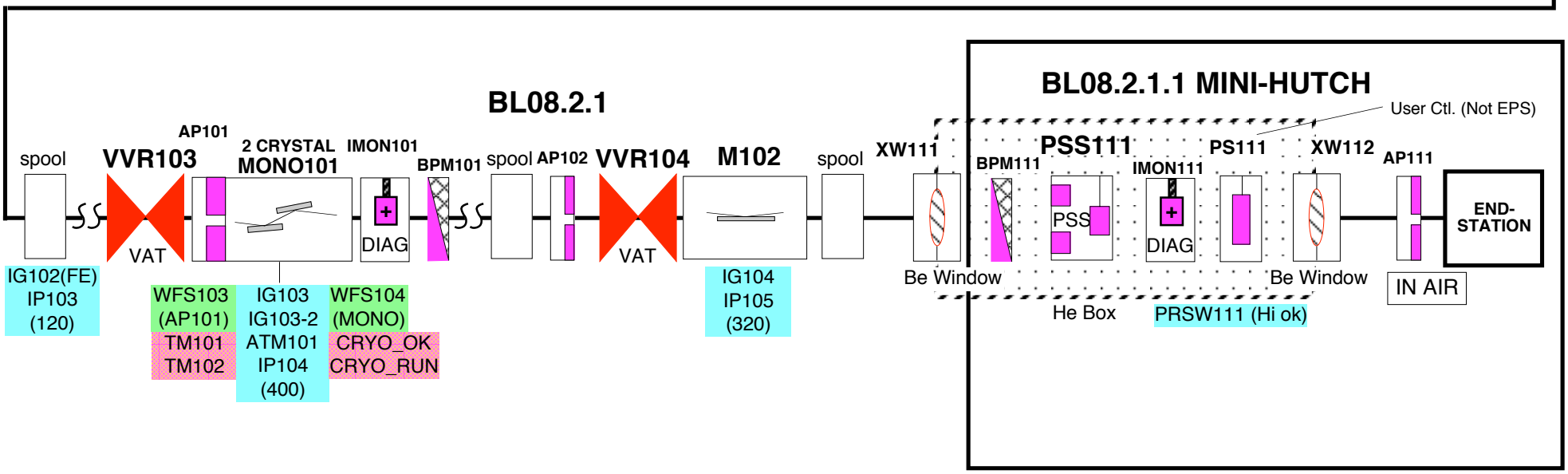

Beamline 8.2.2 (HHMI)

rev 0G K. Woolfe/J. Elkins 06/11/07

If either window leaks on upstrm side, other branch can continue running.

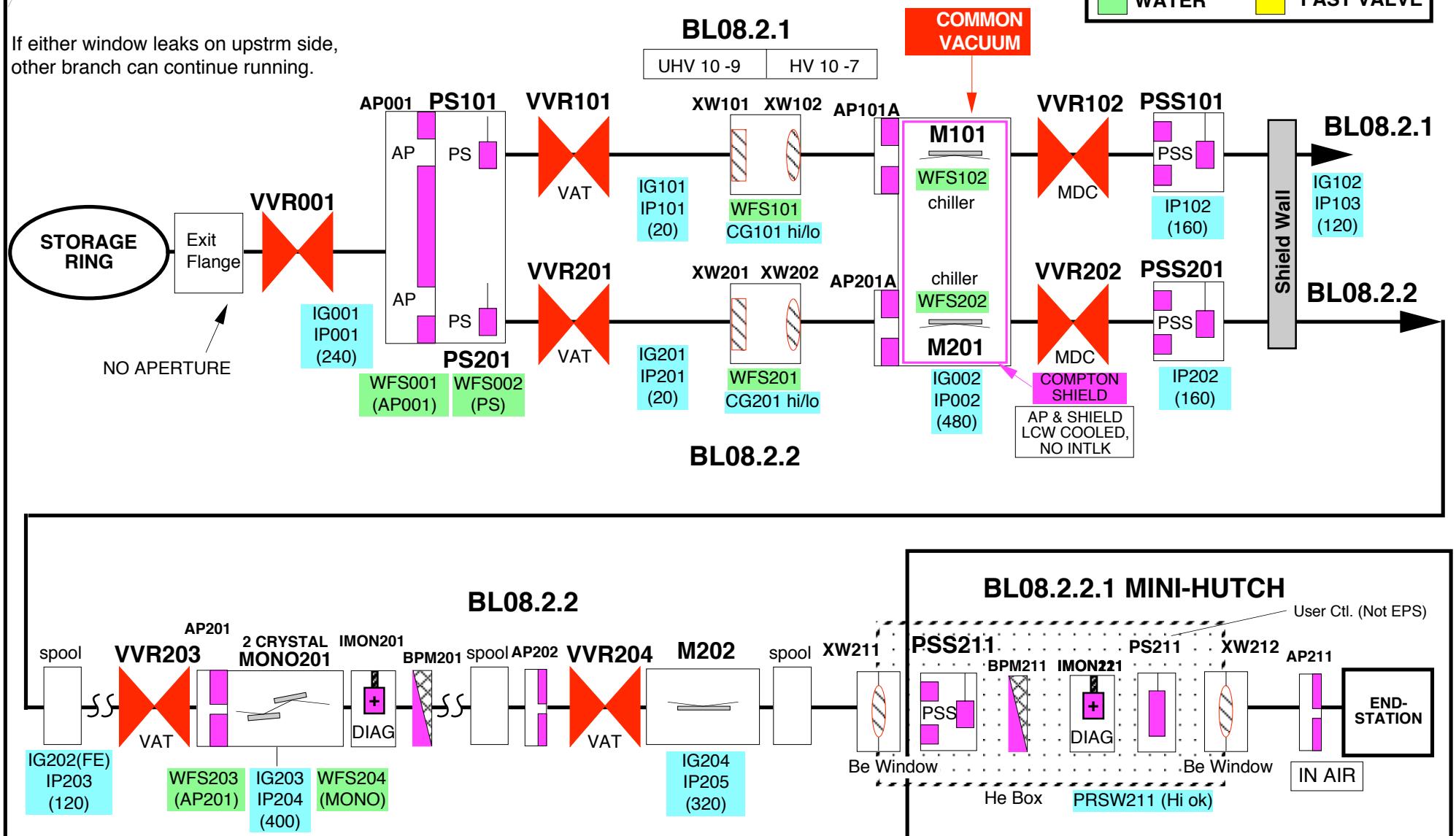

Beamline 8.3.1 (UCB)

rev 0F K. Woolfe/J. Elkins
06/06/01

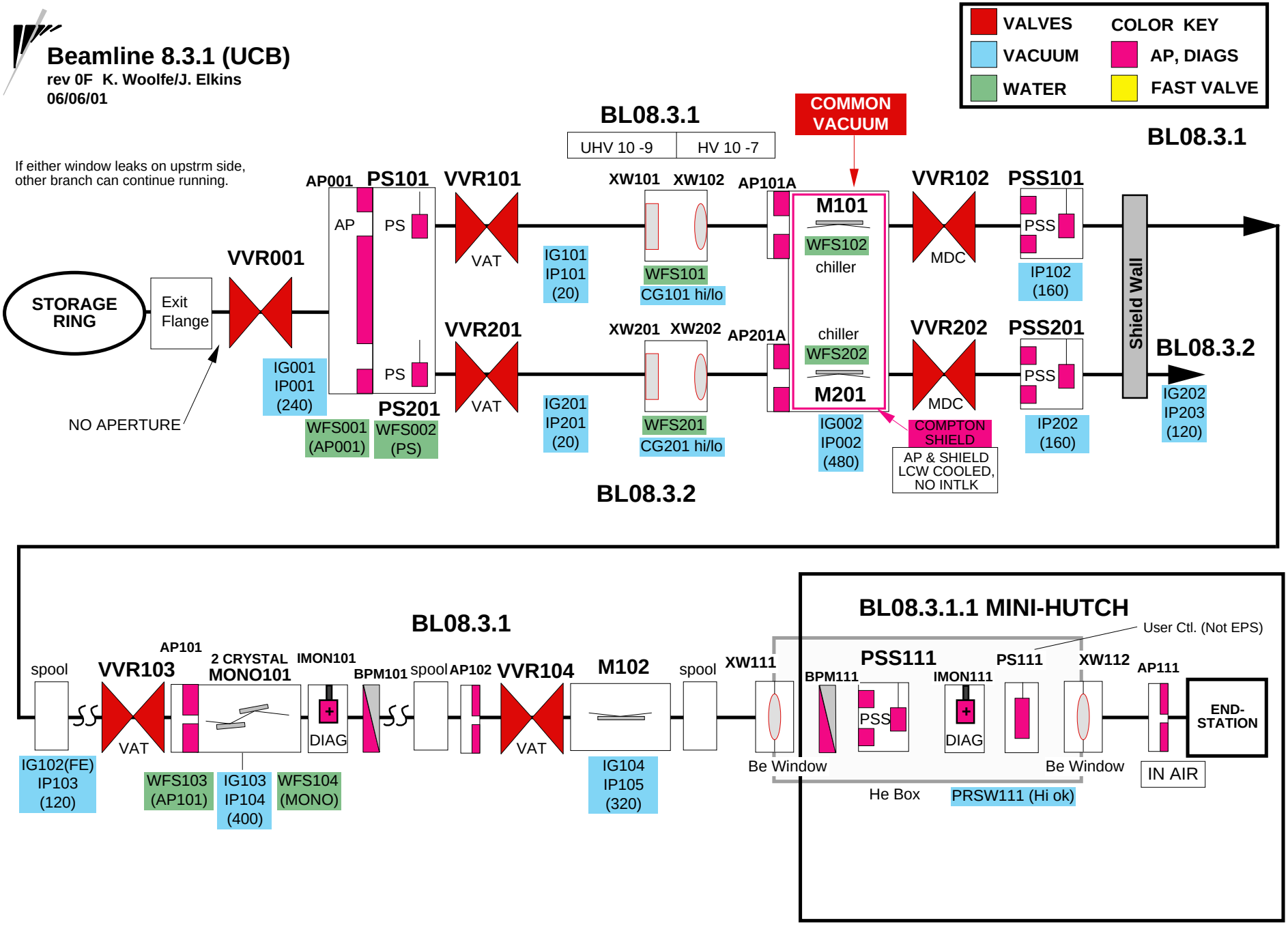

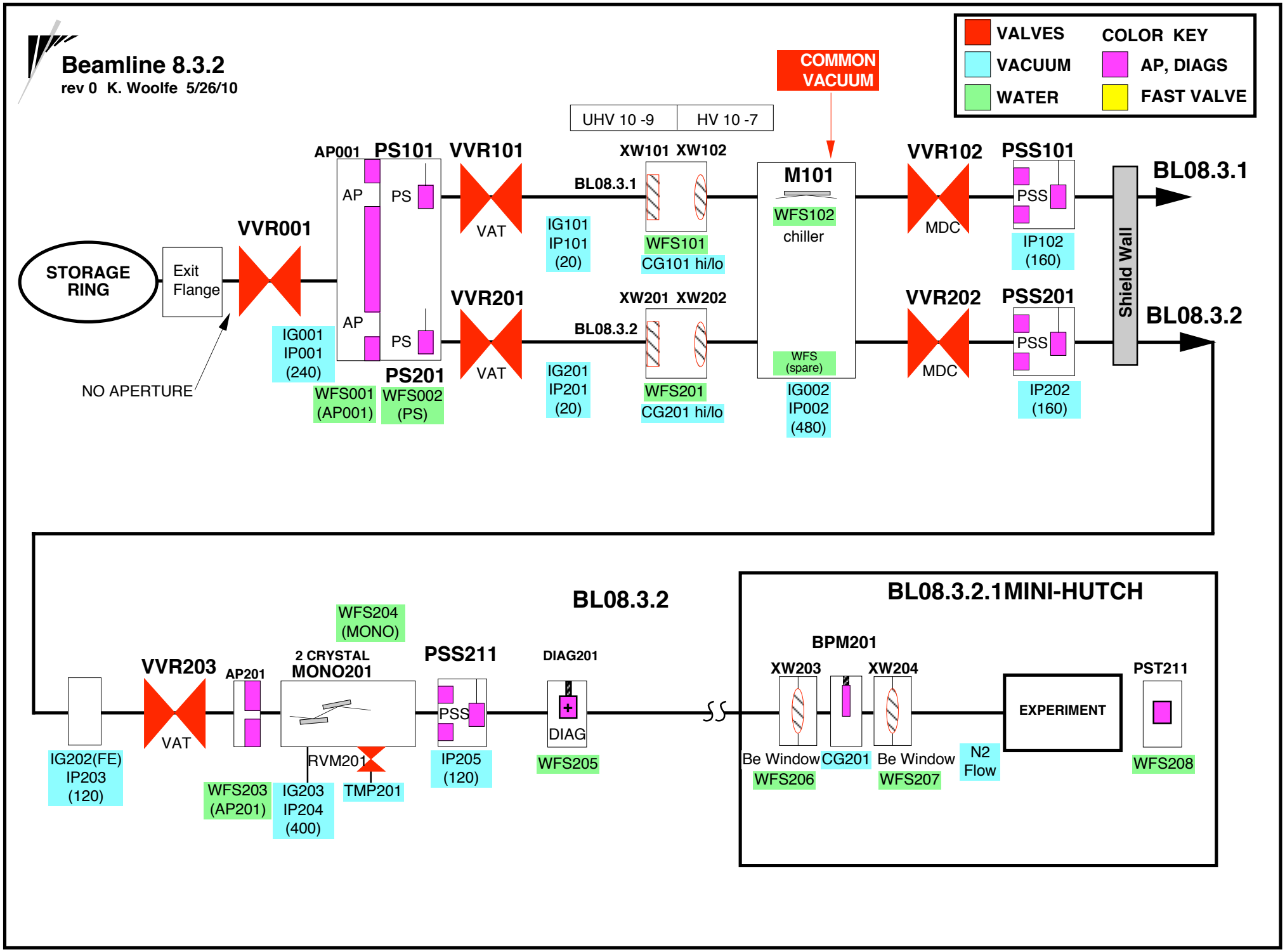
Beamline 8.3.2
rev 0 K. Woolfe 5/26/10
VALVES
VACUUM
WATER
COLOR KEY
AP, DIAGS
FAST VALVE
COMMON VACUUM
UHV 10 -9
HV 10 -7
STORAGE RING
Exit Flange
NO APERTURE
VVR001
IG001
IP001
(240)
AP001
AP
AP
PS101
PS
PS
PS201
WFS001
(AP001)
WFS002
(PS)
VVR101
VAT
VVR201
VAT
BL08.3.1
BL08.3.2
IG101
IP101
(20)
IG201
IP201
(20)
XW101 XW102
XW201 XW202
WFS101
CG101 hi/lo
WFS201
CG201 hi/lo
M101
WFS102
chiller
WFS
(spare)
IG002
IP002
(480)
VVR102
MDC
VVR202
MDC
PSS101
PSS
IP102
(160)
PSS201
PSS
IP202
(160)
Shield Wall
BL08.3.1
BL08.3.2
BL08.3.2
IG202(FE)
IP203
(120)
VVR203
VAT
AP201
WFS203
(AP201)
WFS204
(MONO)
2 CRYSTAL
MONO201
RVM201
IG203
IP204
(400)
TMP201
PSS211
PSS
IP205
(120)
DIAG201
DIAG
WFS205
BL08.3.2.1MINI-HUTCH
BPM201
XW203
XW204
Be Window
WFS206
CG201
Be Window
WFS207
N2
Flow
EXPERIMENT
PST211
WFS208

Beamline 9.0.1

Rev 09 Jeremy Mentz 10/3/2013

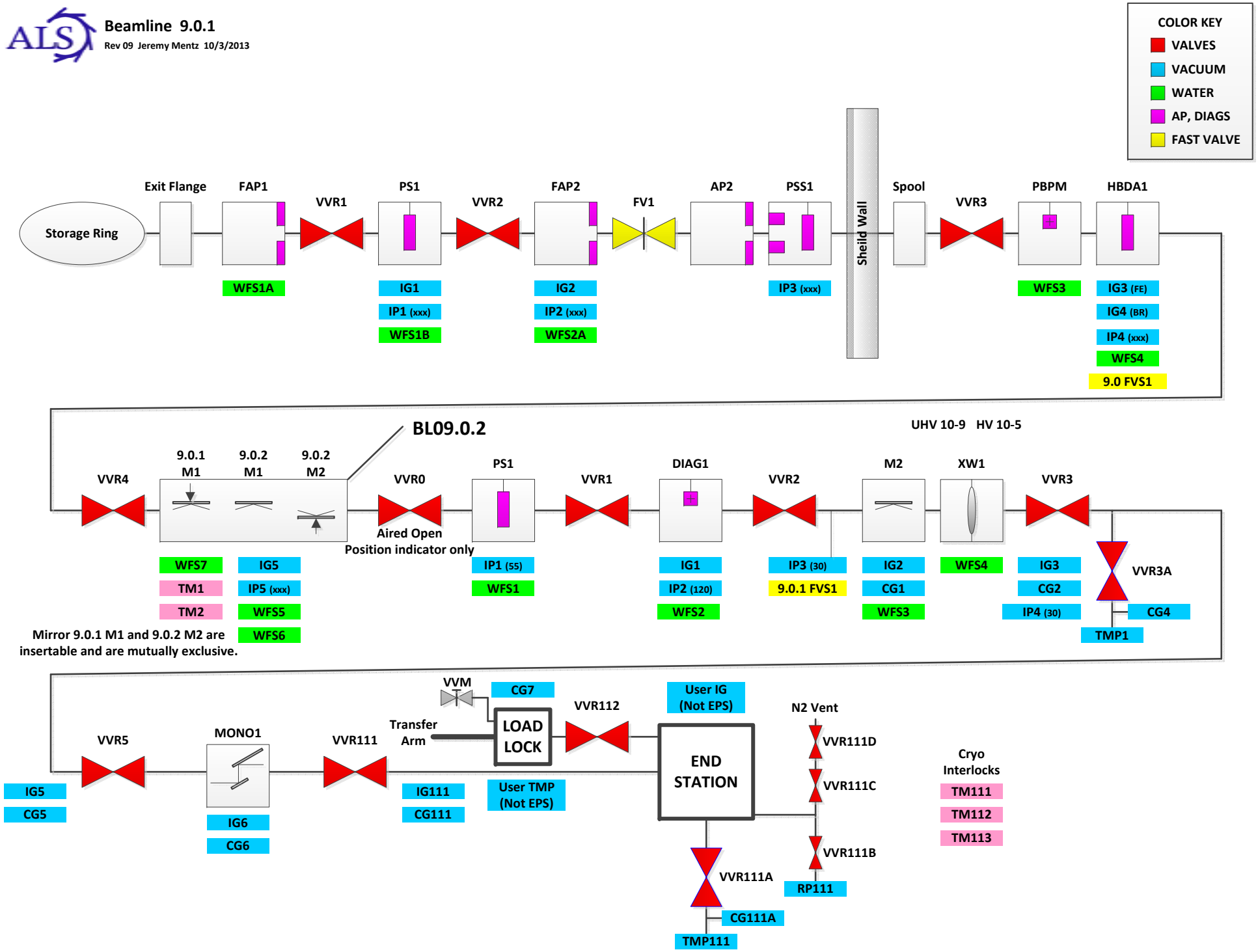

Beamline 9.0.2

rev 7 Ken Woolfe 9/15/09

T4 MOVED; T2&4 LINES CROSS

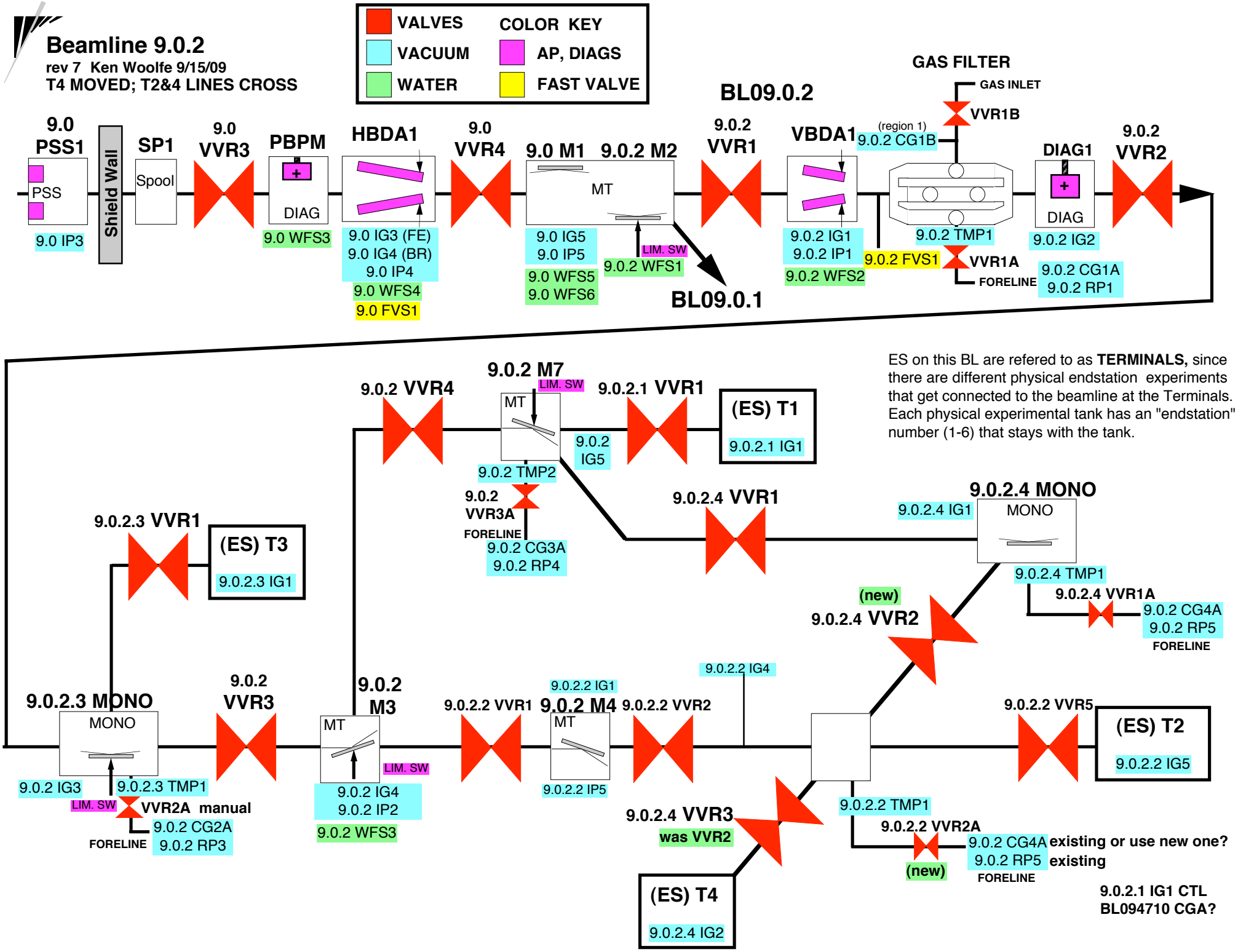

ES on this BL are refered to as **TERMINALS,** since there are different physical endstation experiments that get connected to the beamline at the Terminals. Each physical experimental tank has an "endstation" number (1-6) that stays with the tank.

Beamline 9.3.1

Rev 5 Jeremy Mentz 7/1/2013

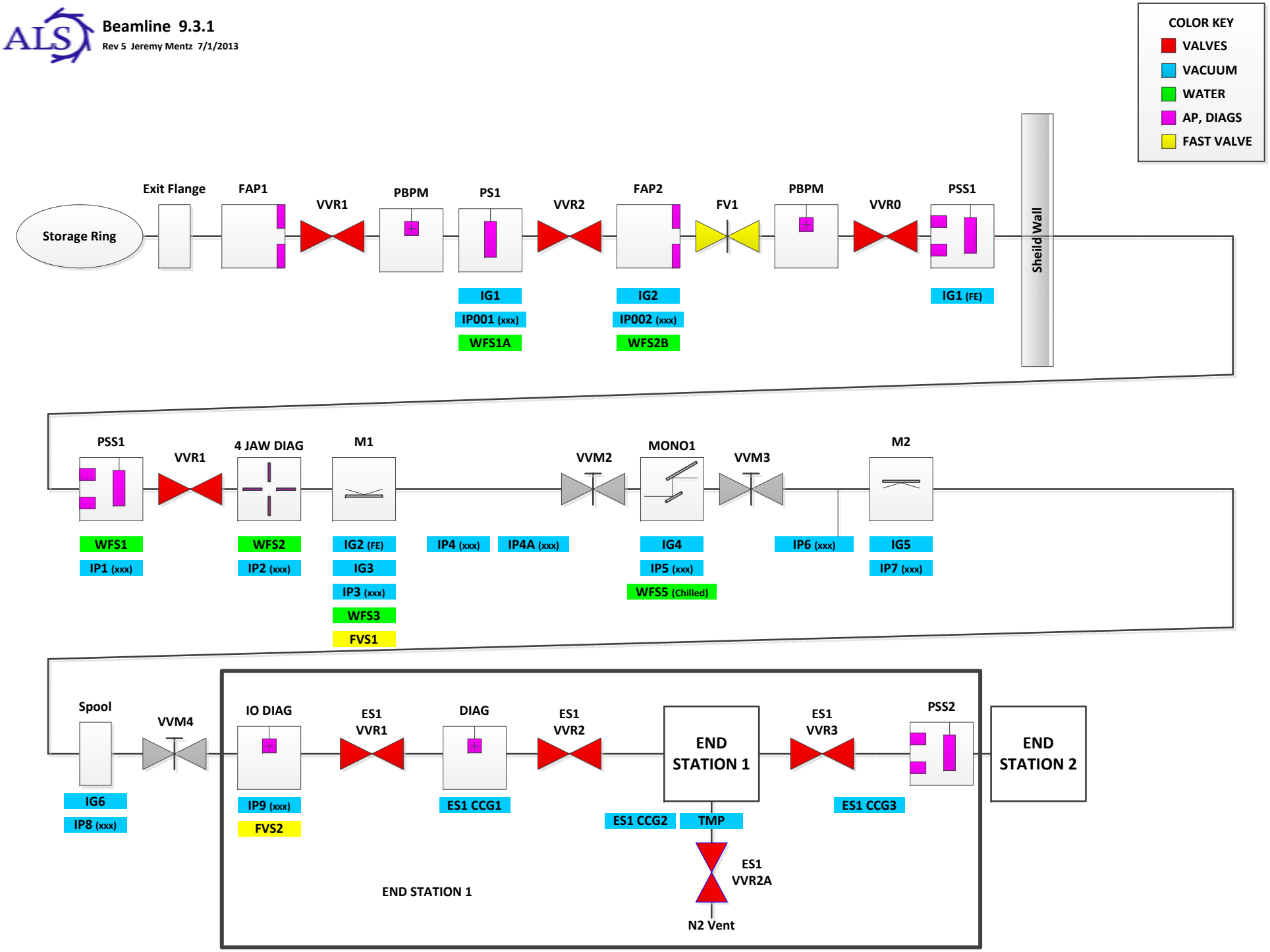

Beamline 9.3.2 Branchline Systems

Zahid HUSSAIN 3/2/94

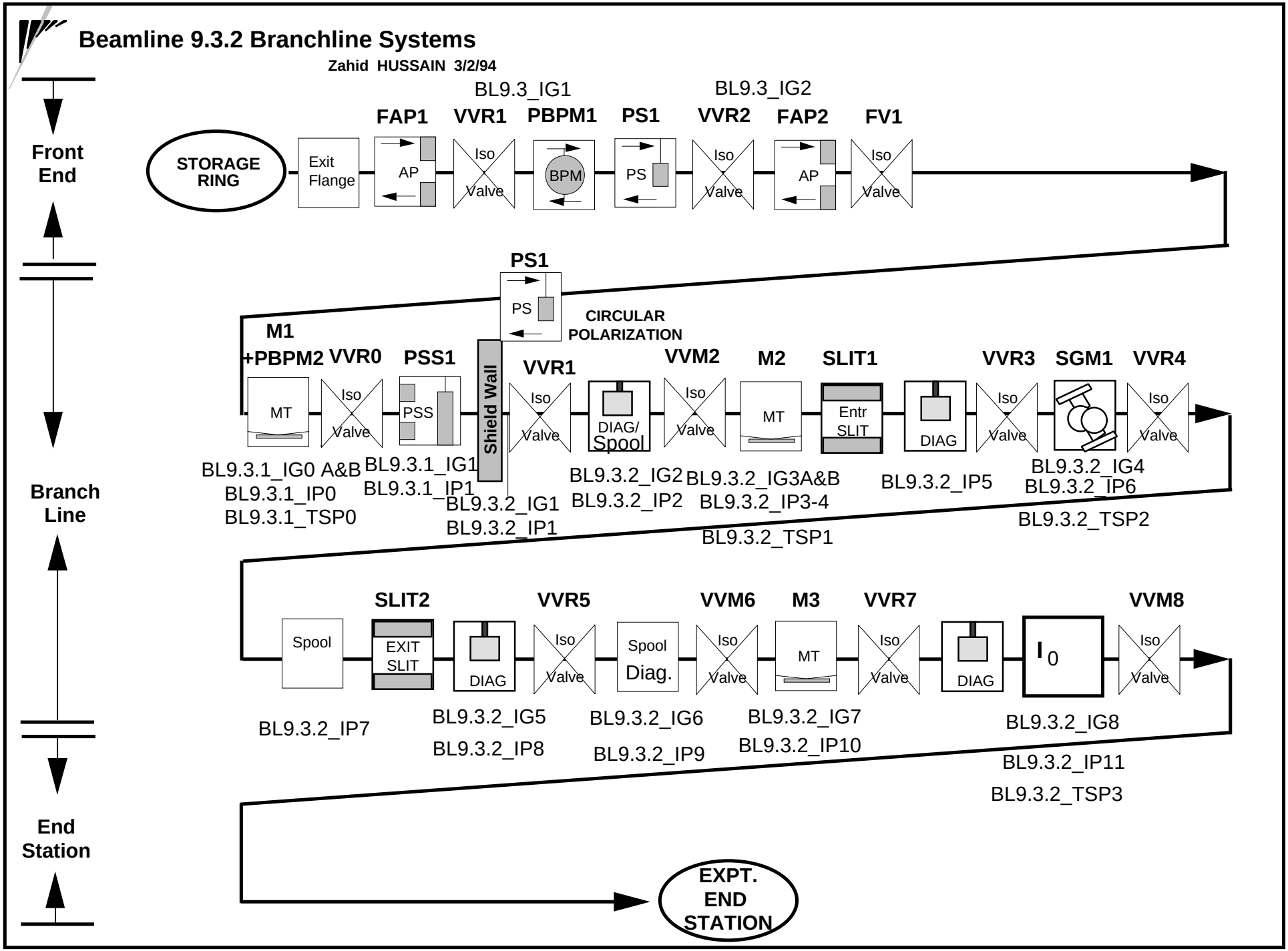

Beamline 10.0 Instrumentation Dwg.

rev 0 Ken Woolfe 01/23/98

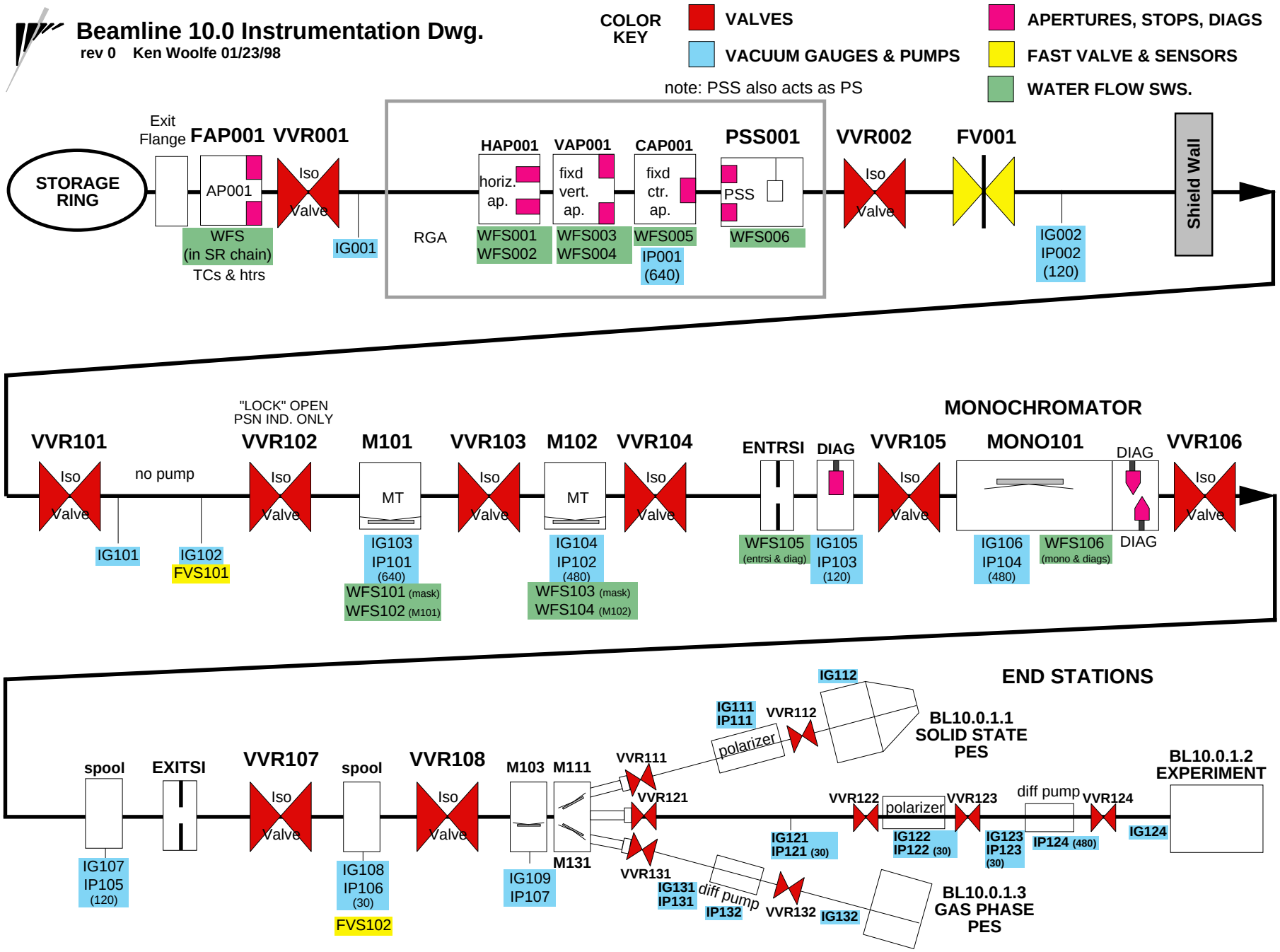

Beamline 10.3.1

Rev 1 Jeremy Mentz 7/1/2013

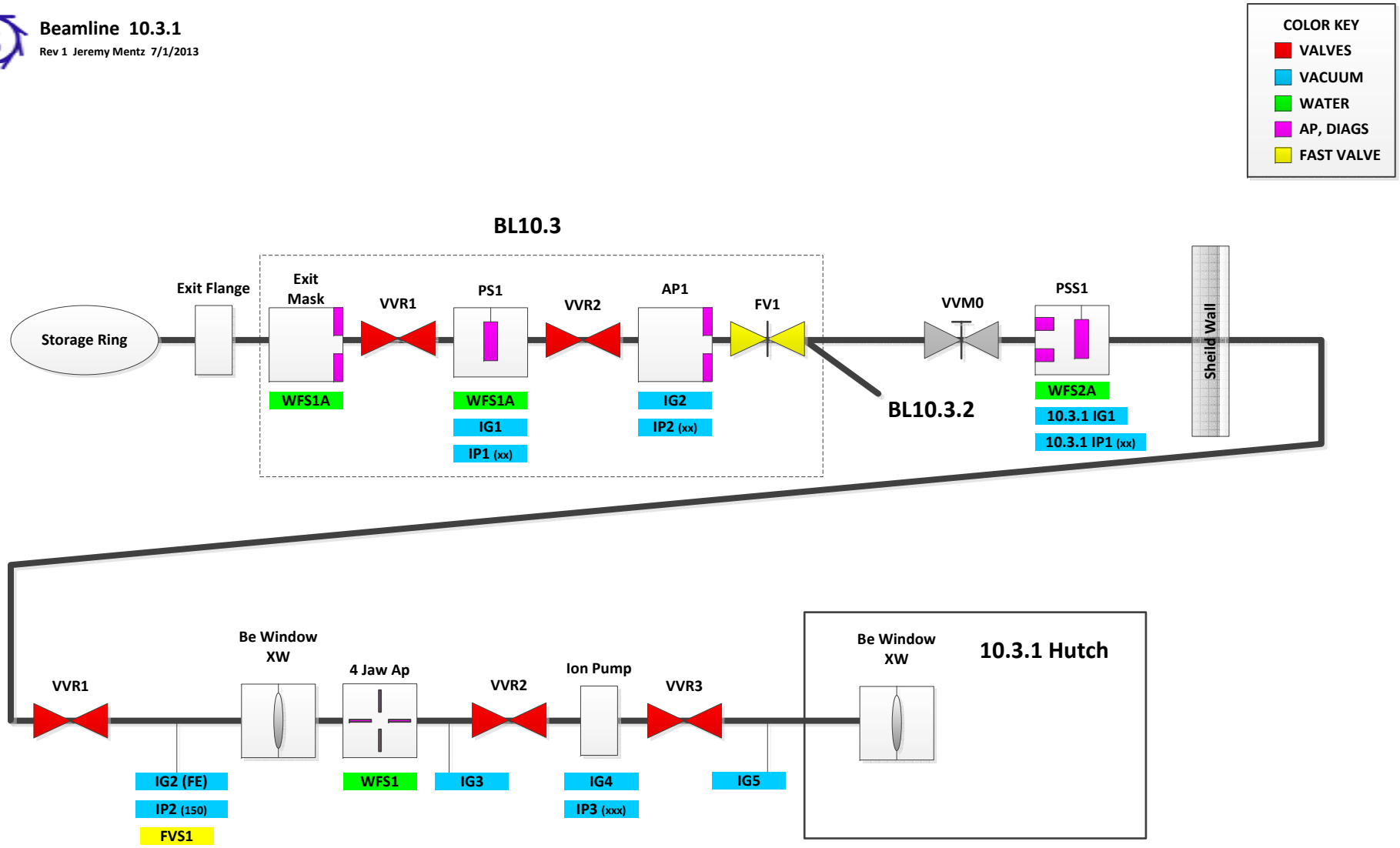

Beamline 10.3.2

rev 0 01/30/01 Jonathan Elkins/K. Woolfe

AS BUILT

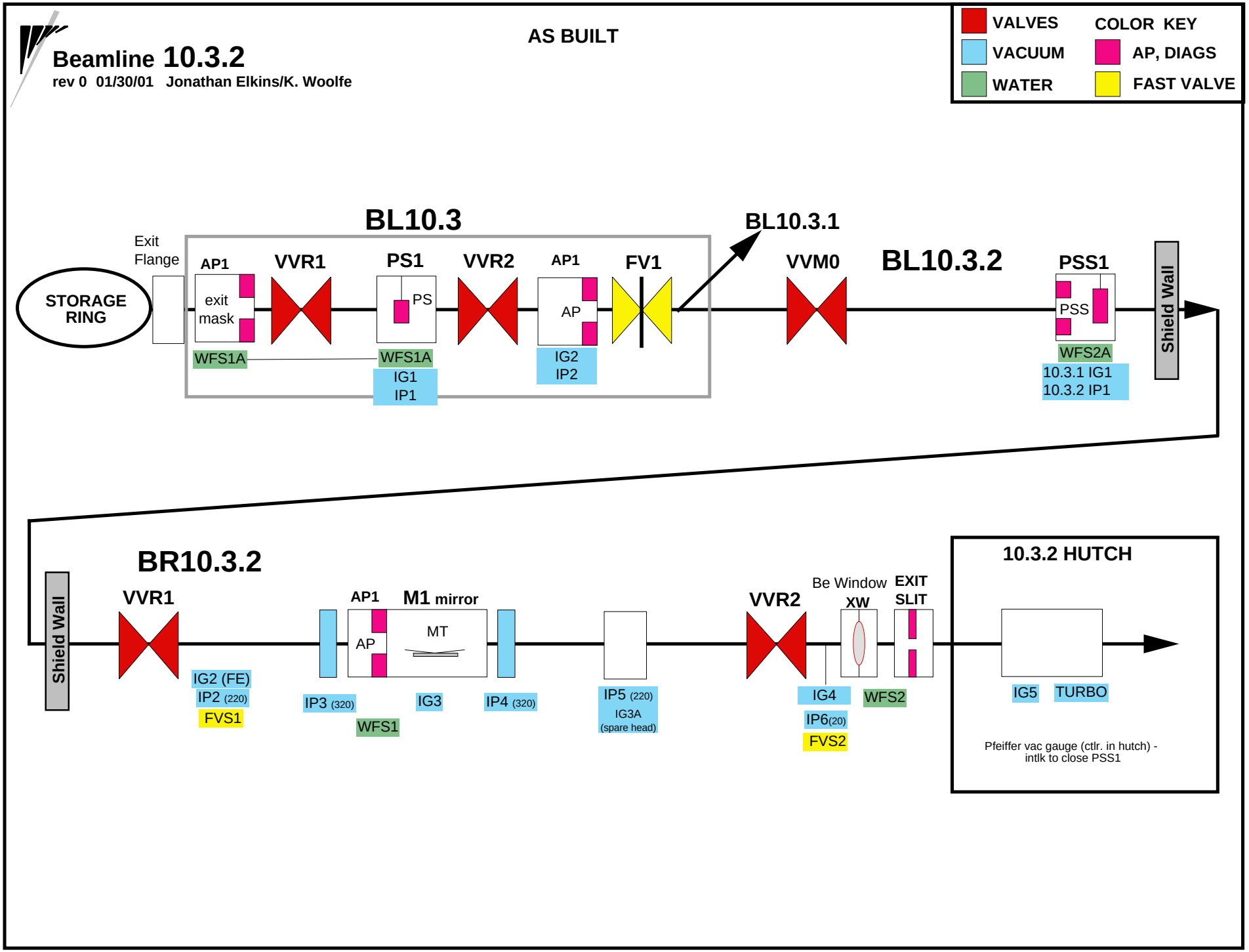

BL1101.vi
C:\EPSSystem\BL11\BL1101\labview\BL1101.vi
Last modified on 5/30/2008 at 2:49 PM
Printed on 5/30/2008 at 2:49 PM

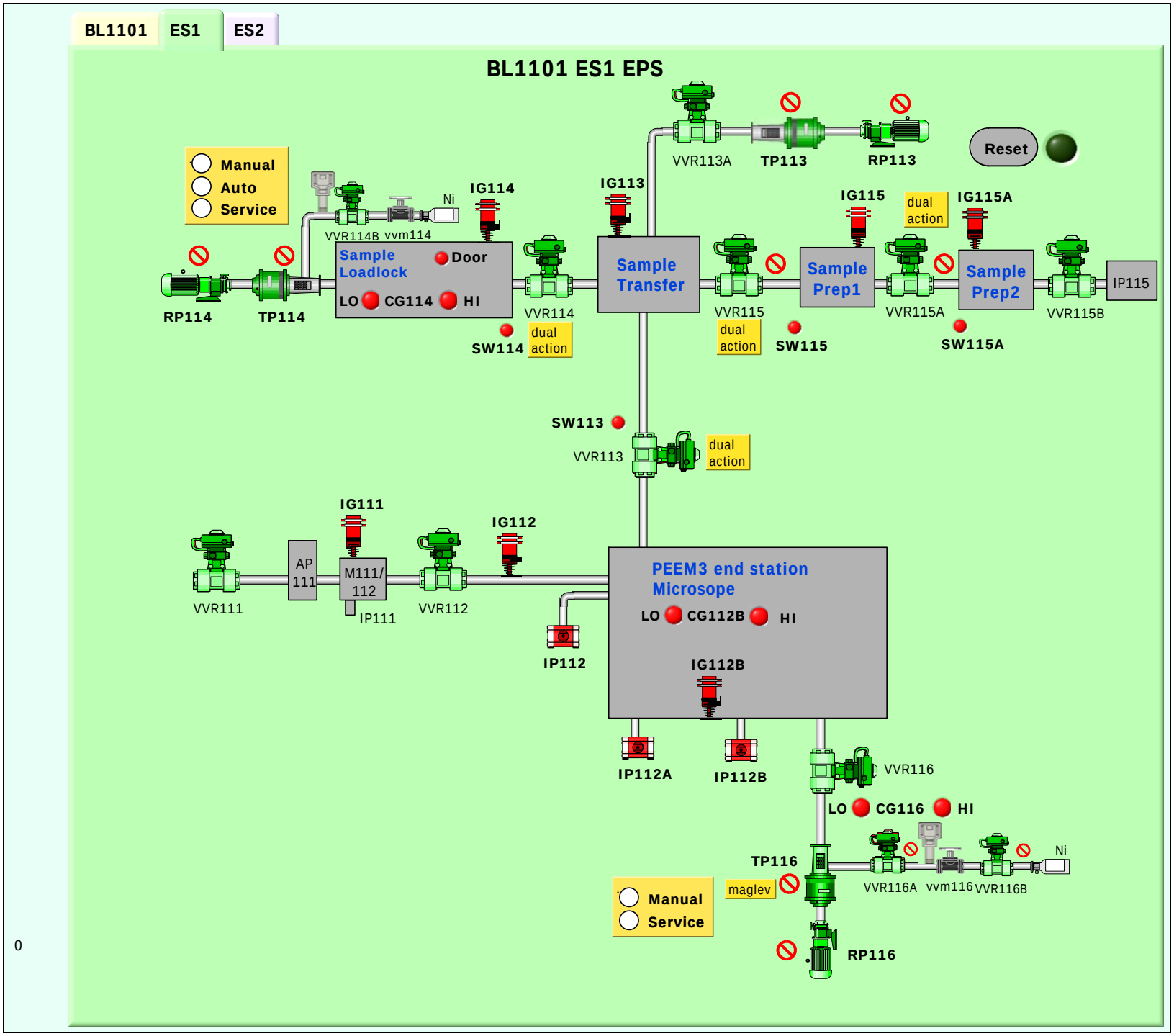

BL1101.vi
C:\EPSSystem\11.0.1\labview\BL1101.vi
Last modified on 3/24/2005 at 11:21 AM
Printed on 3/24/2005 at 2:08 PM

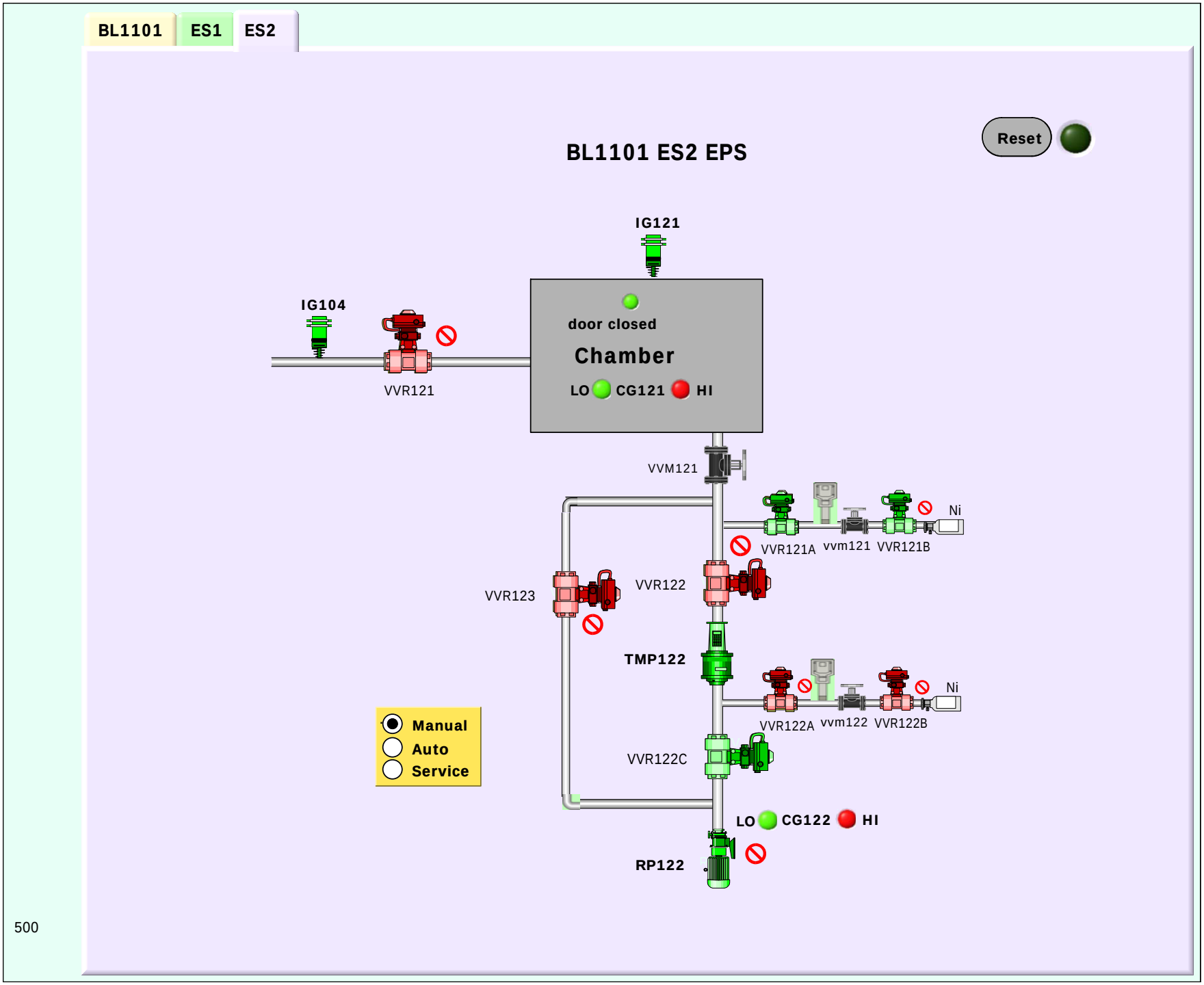

Beamline 11.0.1 (PEEM) EPS dwg. with second endstation

rev3 Ken Woolfe 3/9/04

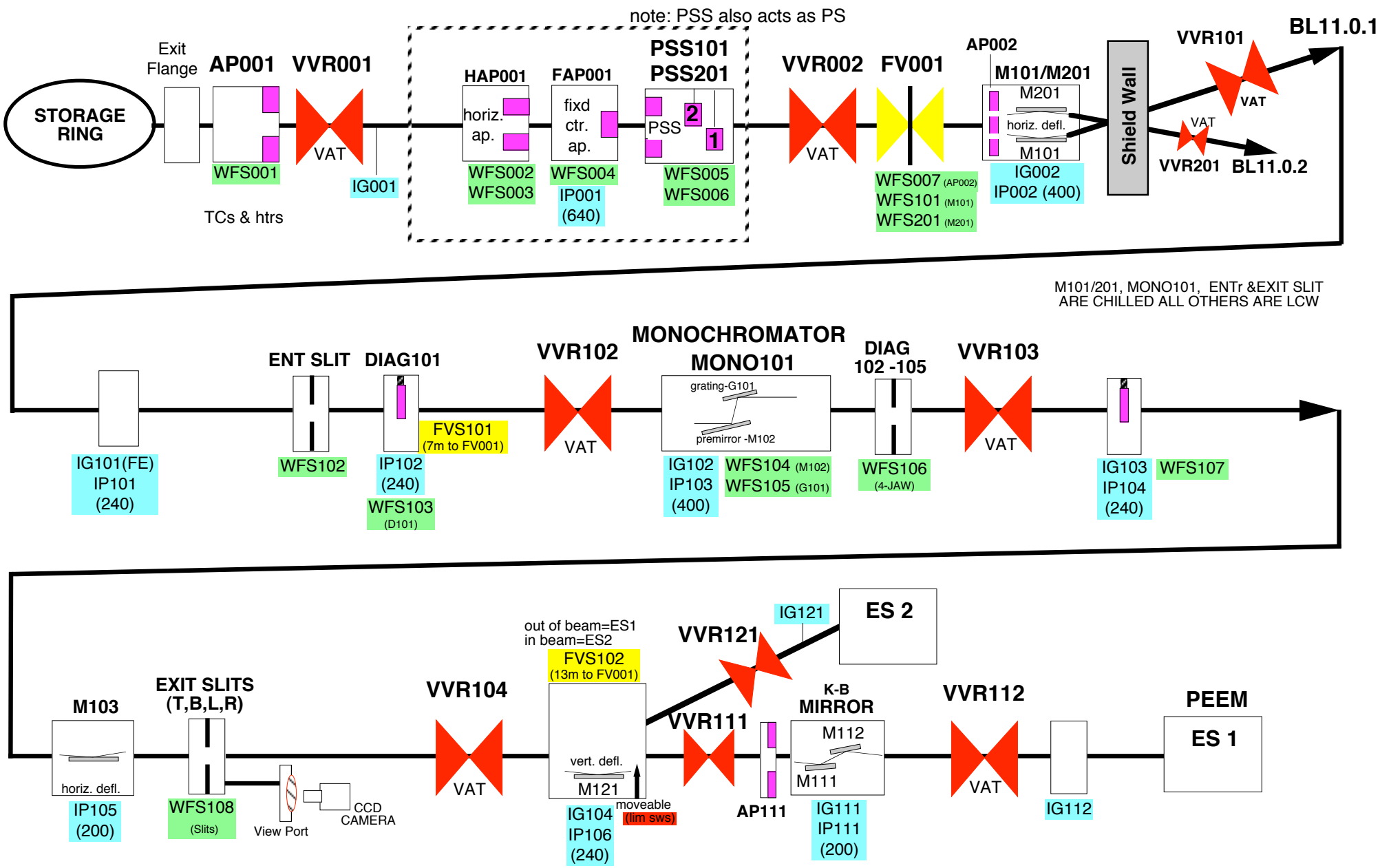

Beamline 11.0.2 (MES) EPS dwg.

rev 8 Ken Woolfe 04/07/11

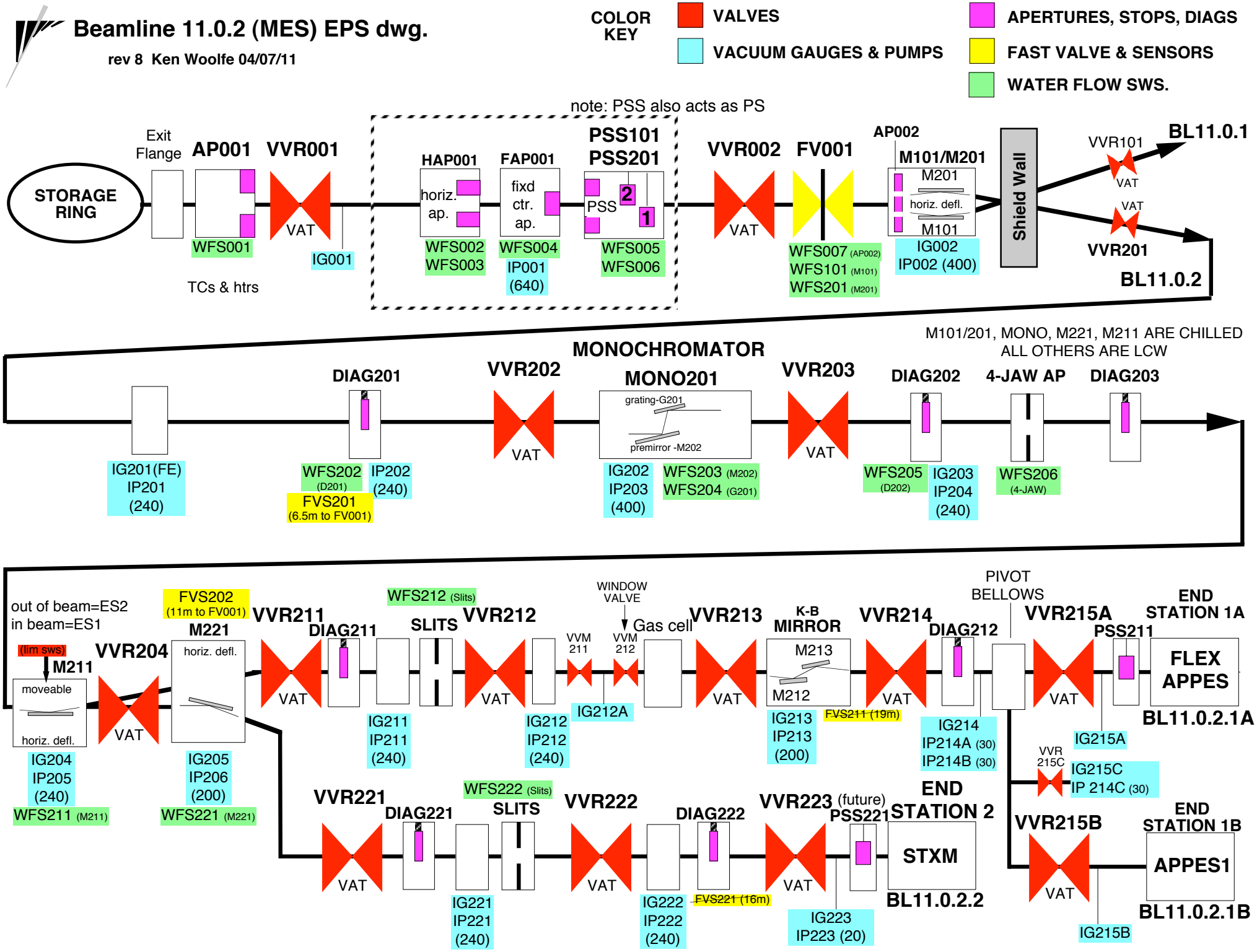

Beamline 11.3.1

rev 2 K. Woolfe 12/2/08

Note: Mono & M101 mirror attenuate beam so that PS101 may stay open even with PSS101 closed.

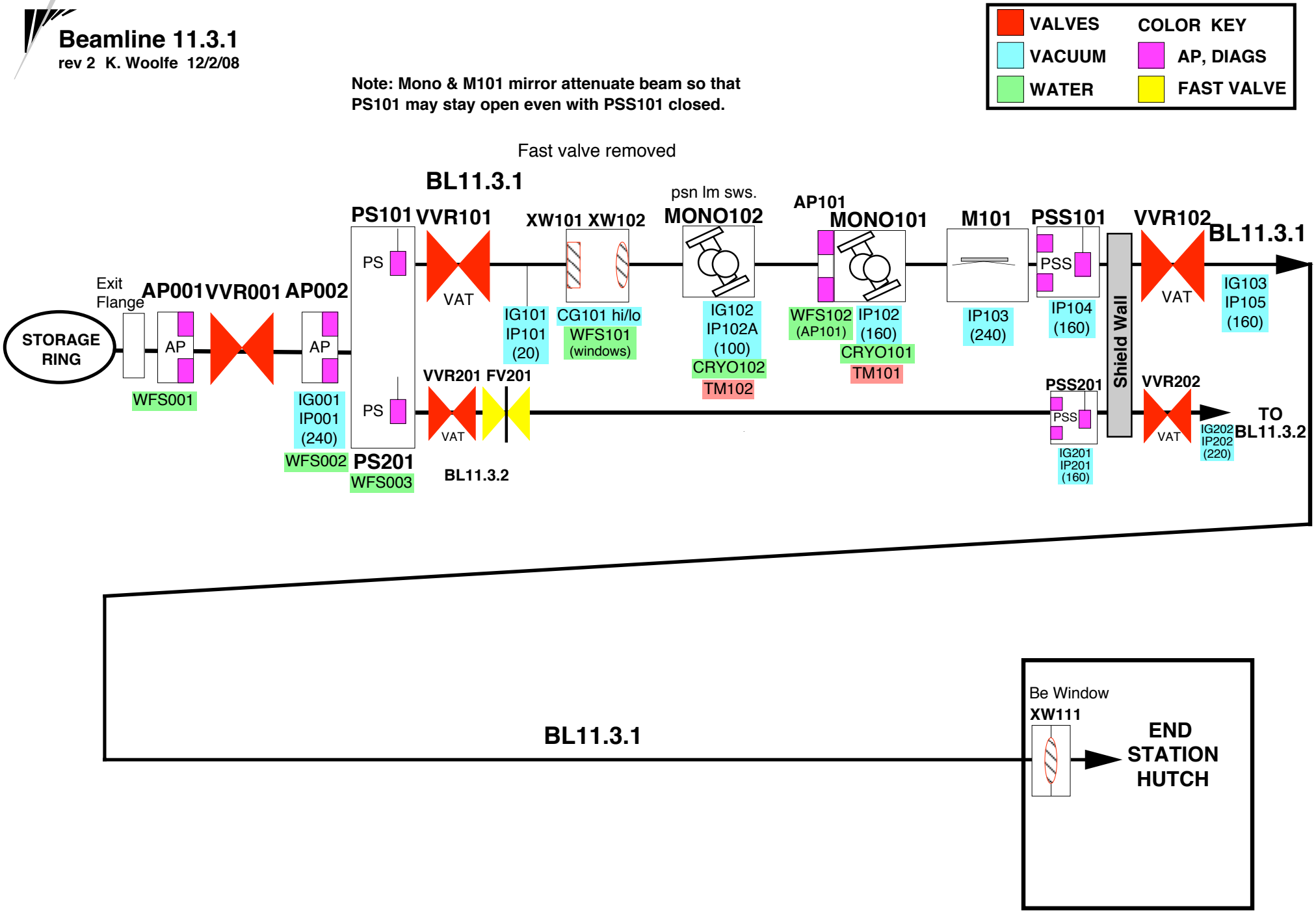

BL1132_AB_New_Icon.vi
C:\EPSSystem\BL11\BL1132\labview\BL1132_AB_New_Icon.vi
Last modified on 9/19/2008 at 4:32 PM
Printed on 9/23/2008 at 2:23 PM

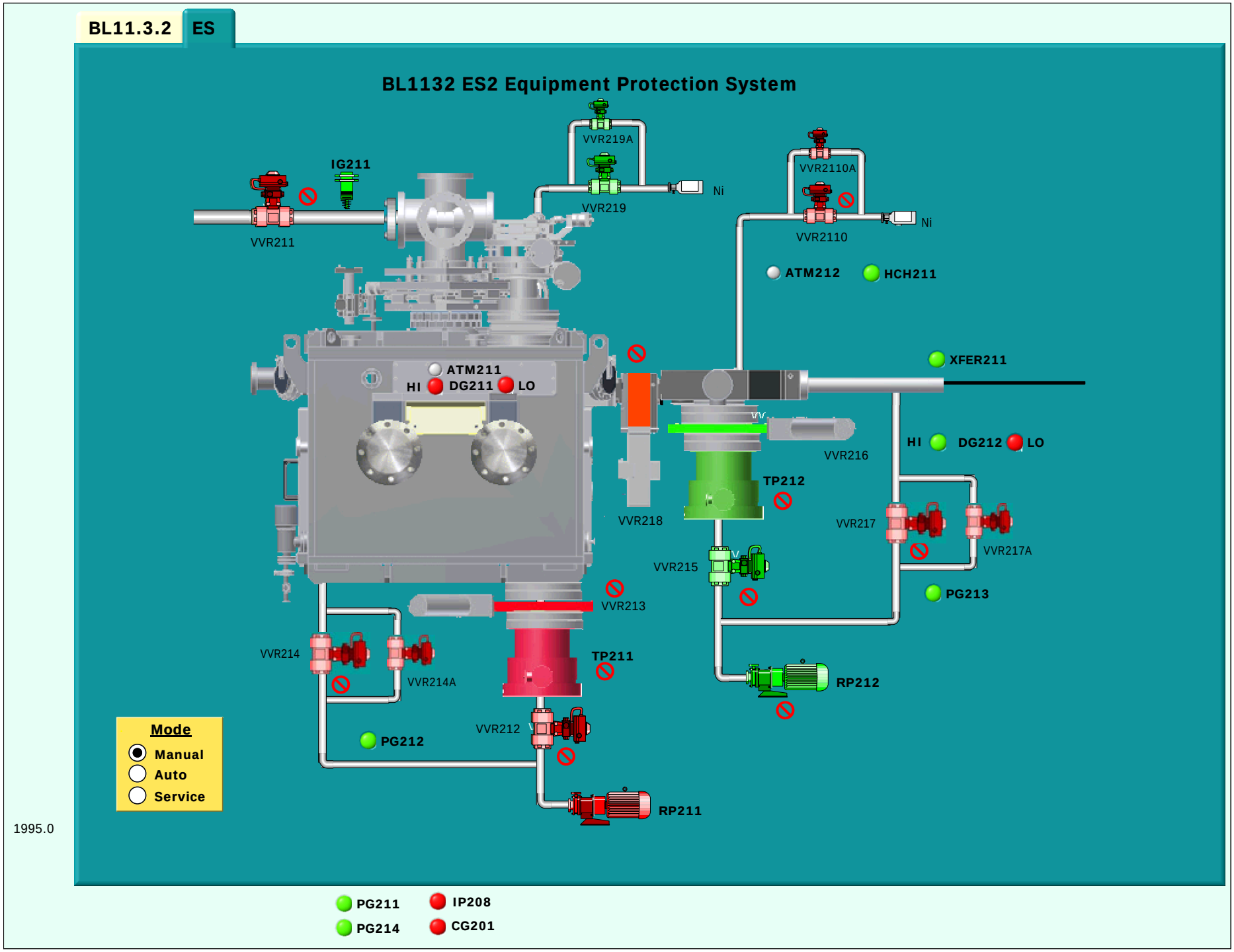

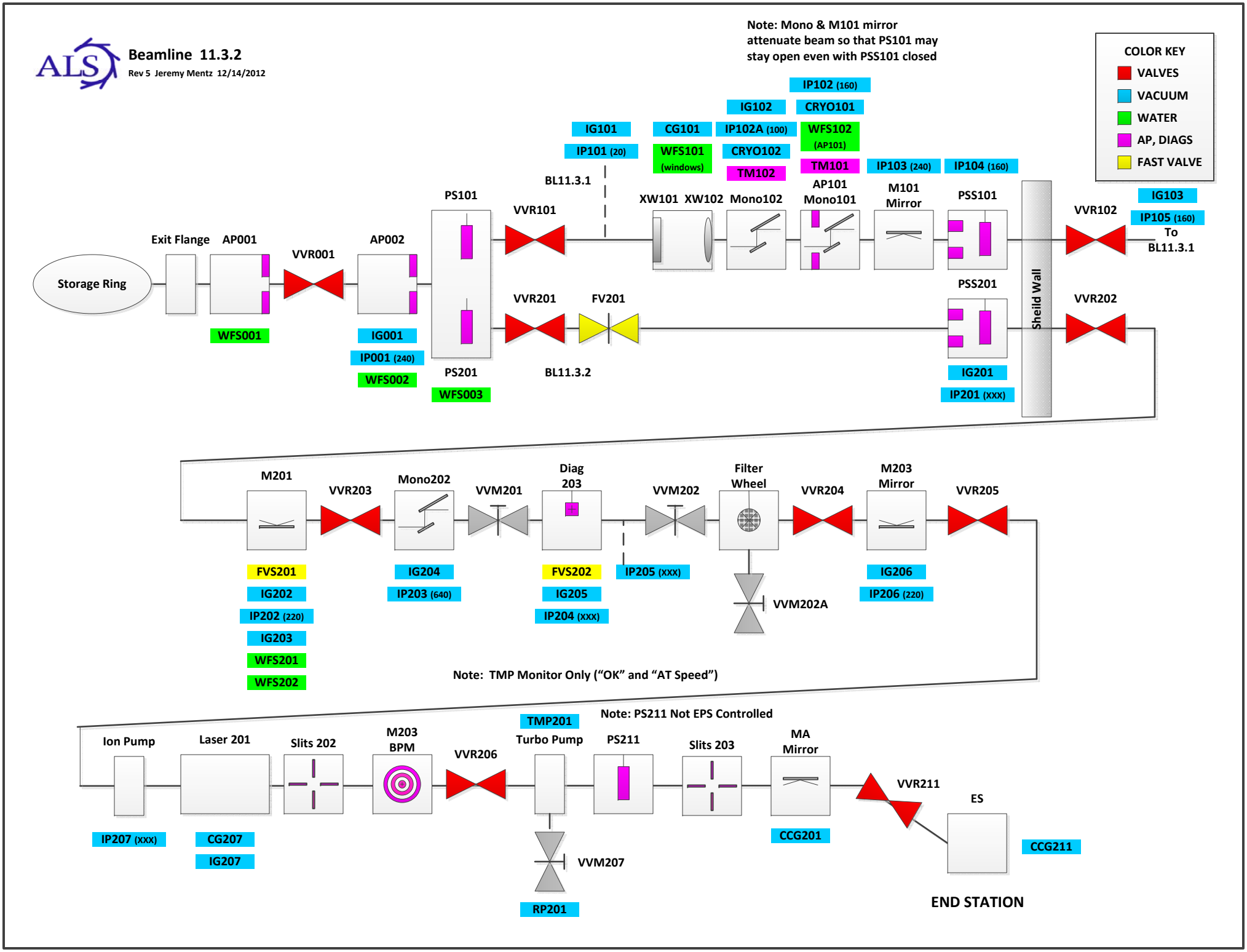
Beamline 11.3.2
Rev 5 Jeremy Mentz 12/14/2012
Note: Mono & M101 mirror attenuate beam so that PS101 may stay open even with PSS101 closed
COLOR KEY
VALVES
VACUUM
WATER
AP, DIAGS
FAST VALVE
Storage Ring
Exit Flange
AP001
WFS001
VVR001
AP002
IG001
IP001 (240)
WFS002
PS101
PS201
WFS003
VVR101
VVR201
FV201
BL11.3.1
BL11.3.2
IG101
IP101 (20)
CG101
WFS101 (windows)
IG102
IP102A (100)
CRYO102
TM102
IP102 (160)
CRYO101
WFS102 (AP101)
TM101
XW101
XW102
Mono102
AP101
Mono101
M101 Mirror
IP103 (240)
IP104 (160)
PSS101
PSS201
IG201
IP201 (XXX)
Sheild Wall
VVR102
VVR202
IG103
IP105 (160)
To BL11.3.1
M201
FVS201
IG202
IP202 (220)
IG203
WFS201
WFS202
VVR203
Mono202
IG204
IP203 (640)
VVM201
Diag 203
FVS202
IG205
IP204 (XXX)
IP205 (XXX)
VVM202
Filter Wheel
VVM202A
VVR204
M203 Mirror
IG206
IP206 (220)
VVR205
Note: TMP Monitor Only ("OK" and "AT Speed")
Ion Pump
IP207 (XXX)
Laser 201
CG207
IG207
Slits 202
M203 BPM
VVR206
TMP201
Turbo Pump
VVM207
RP201
Note: PS211 Not EPS Controlled
PS211
Slits 203
MA Mirror
CCG201
VVR211
ES
CCG211
END STATION

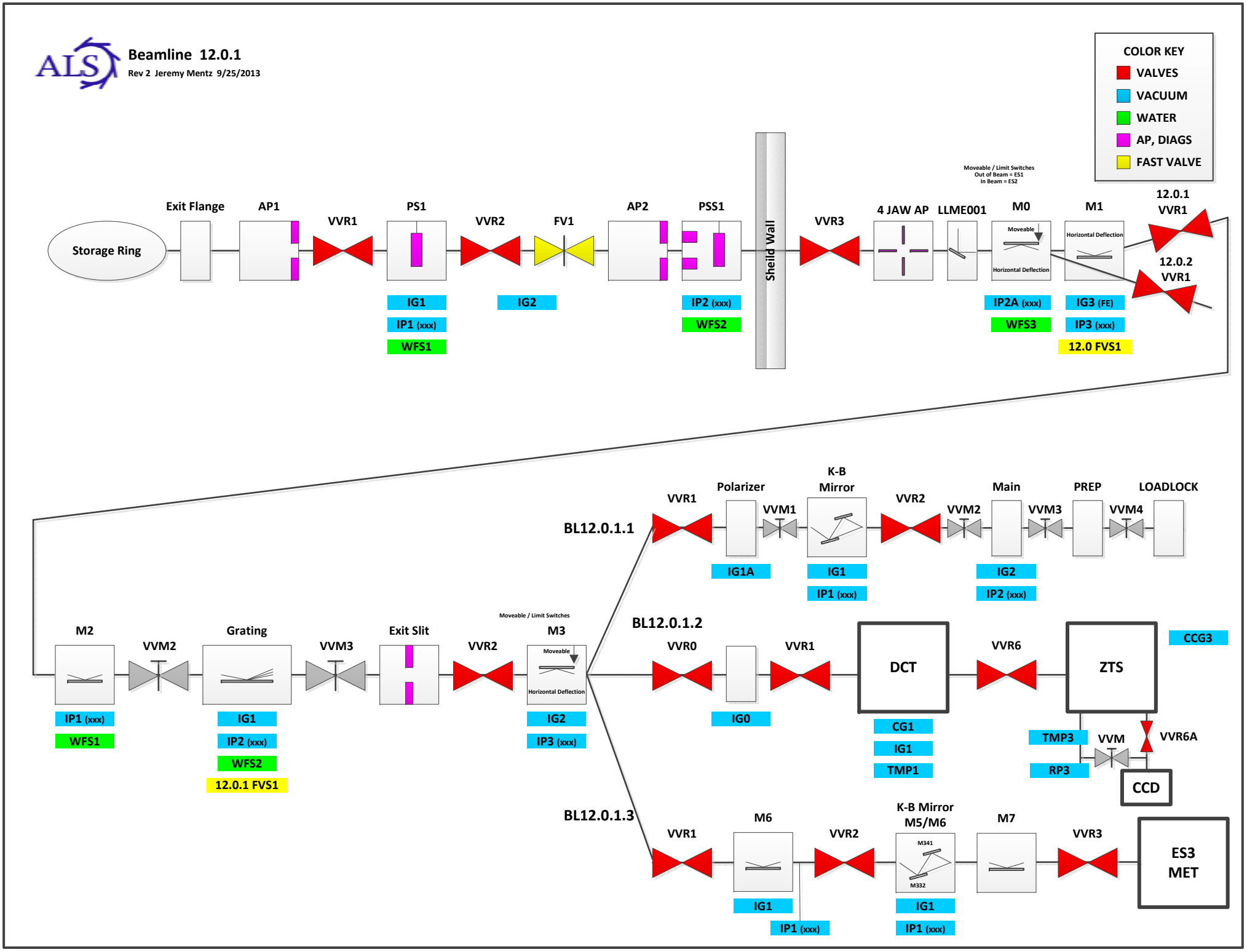
Beamline 12.0.1
Rev 2 Jeremy Mentz 9/25/2013
COLOR KEY
VALVES
VACUUM
WATER
AP, DIAGS
FAST VALVE
Storage Ring
Exit Flange
AP1
VVR1
PS1
IG1
IP1 (xxx)
WFS1
VVR2
IG2
FV1
AP2
PSS1
IP2 (xxx)
WFS2
Sheild Wall
VVR3
4 JAW AP
LLME001
Moveable / Limit Switches
Out of Beam = ES1
In Beam = ES2
M0
Moveable
Horizontal Deflection
IP2A (xxx)
WFS3
M1
Horizontal Deflection
IG3 (FE)
IP3 (xxx)
12.0 FVS1
12.0.1
VVR1
12.0.2
VVR1
BL12.0.1.1
VVR1
Polarizer
IG1A
VVM1
K-B
Mirror
IG1
IP1 (xxx)
VVR2
VVM2
Main
IG2
IP2 (xxx)
VVM3
PREP
VVM4
LOADLOCK
M2
IP1 (xxx)
WFS1
VVM2
Grating
IG1
IP2 (xxx)
WFS2
12.0.1 FVS1
VVM3
Exit Slit
VVR2
Moveable / Limit Switches
M3
Moveable
Horizontal Deflection
IG2
IP3 (xxx)
BL12.0.1.2
VVR0
IG0
VVR1
DCT
CG1
IG1
TMP1
VVR6
ZTS
CCG3
TMP3
RP3
VVM
VVR6A
CCD
BL12.0.1.3
VVR1
M6
IG1
IP1 (xxx)
VVR2
K-B Mirror
M5/M6
M341
M332
IG1
IP1 (xxx)
M7
VVR3
ES3
MET

BL1201.vi
C:\EPSSystems\BL12\BL1201\labview\BL1201.vi
Last modified on 6/15/2012 at 11:03 AM
Printed on 6/15/2012 at 11:06 AM

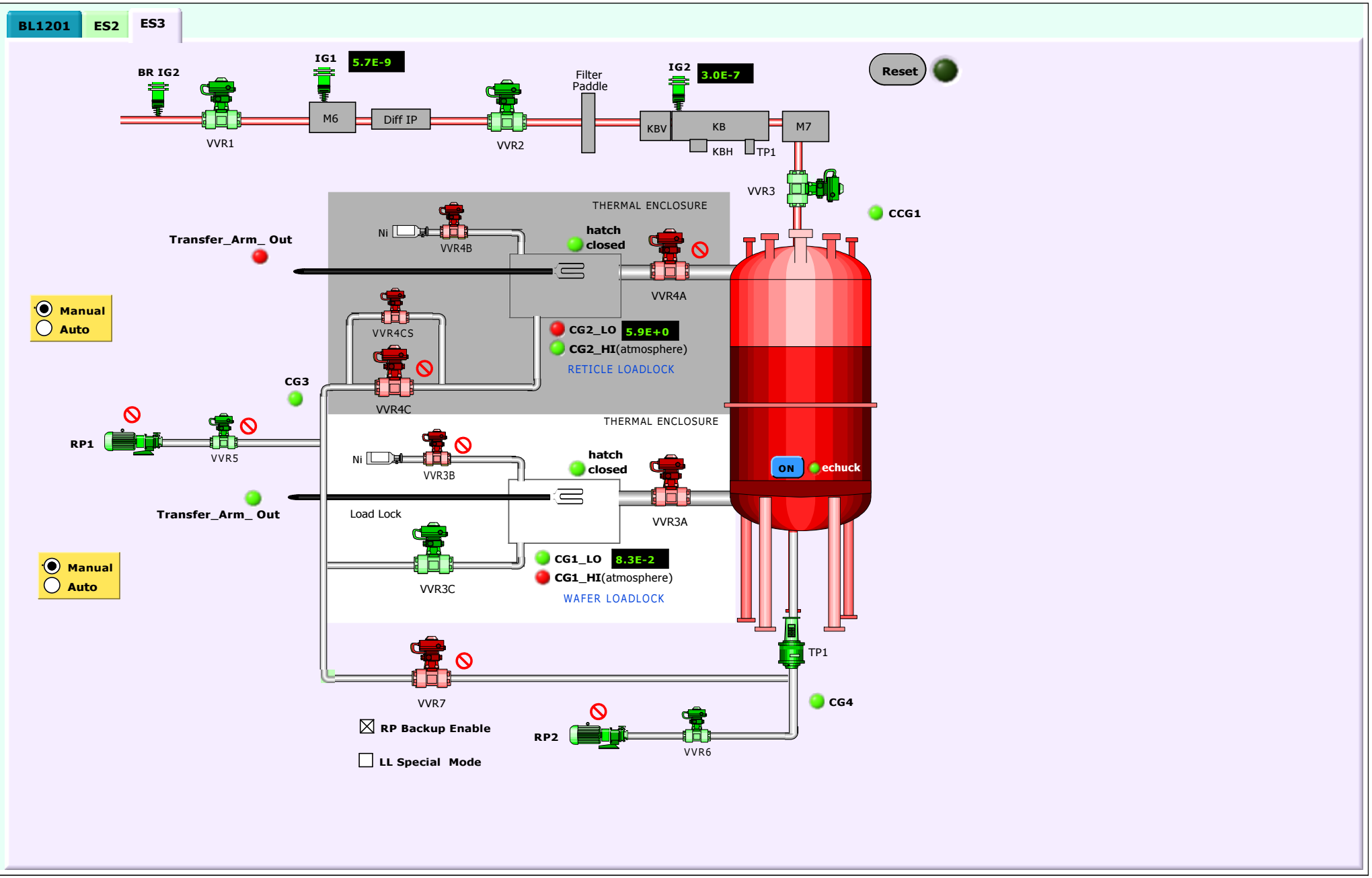

Beamline 12.0.1

rev 5 Carl Cork 2012-01-17

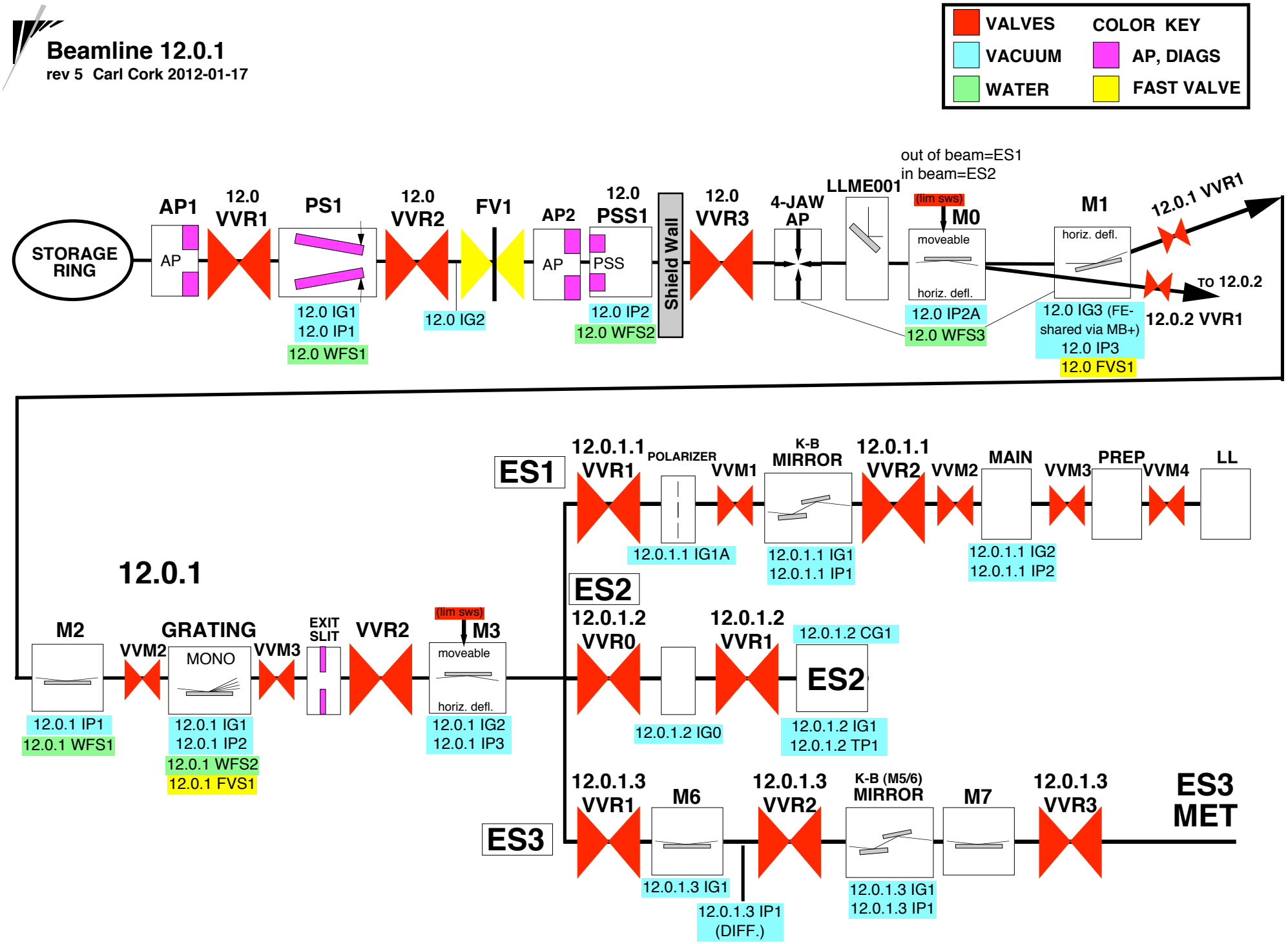

BL1202 GUI.vi
C:\EPSSystem\12.0.2\labview\BL1202 GUI.vi
Last modified on 4/1/2004 at 11:08 AM
Printed on 4/1/2004 at 11:10 AM

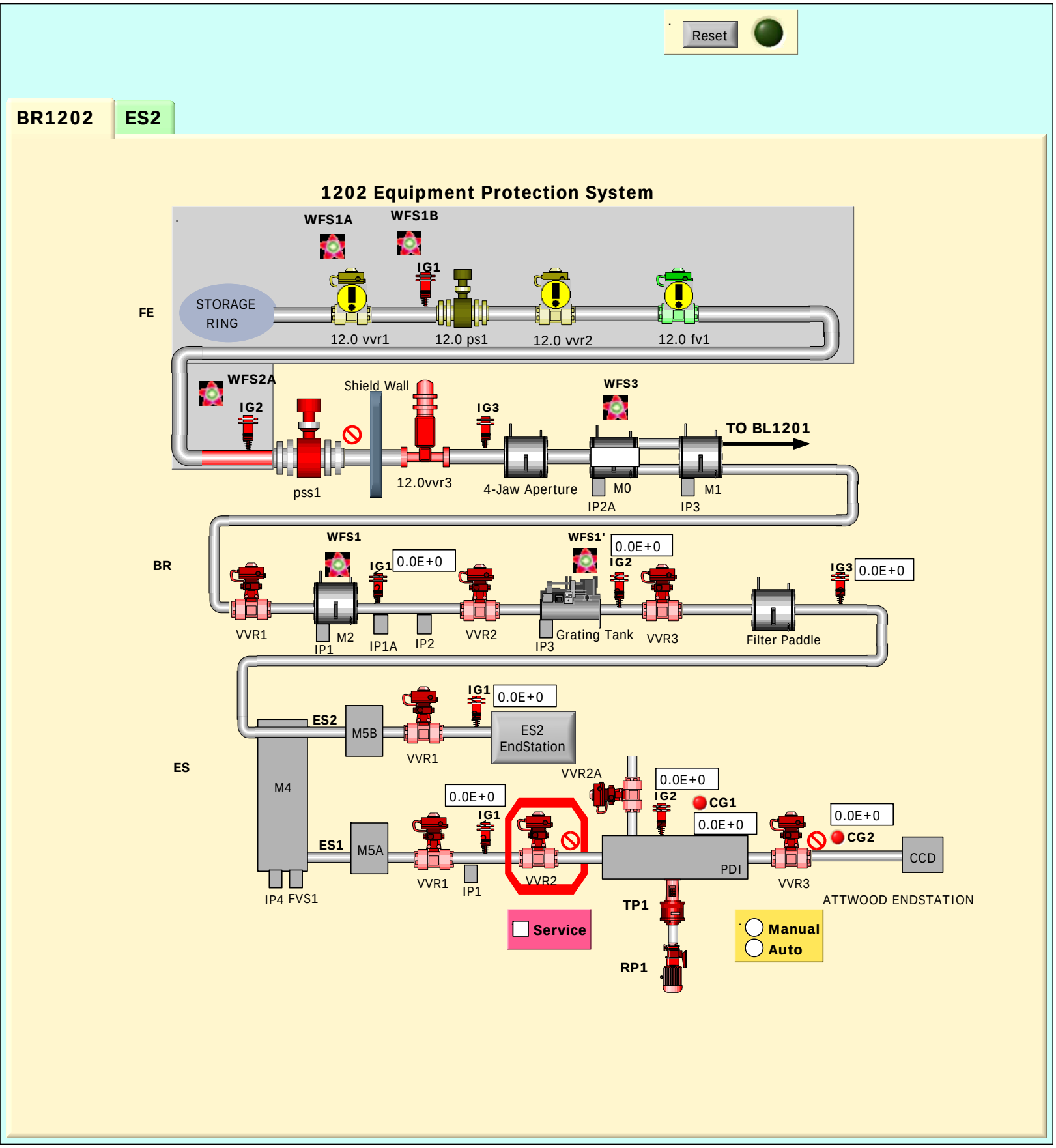

Beamline 12.0.2

rev 0 Ken Woolfe 10/4/05

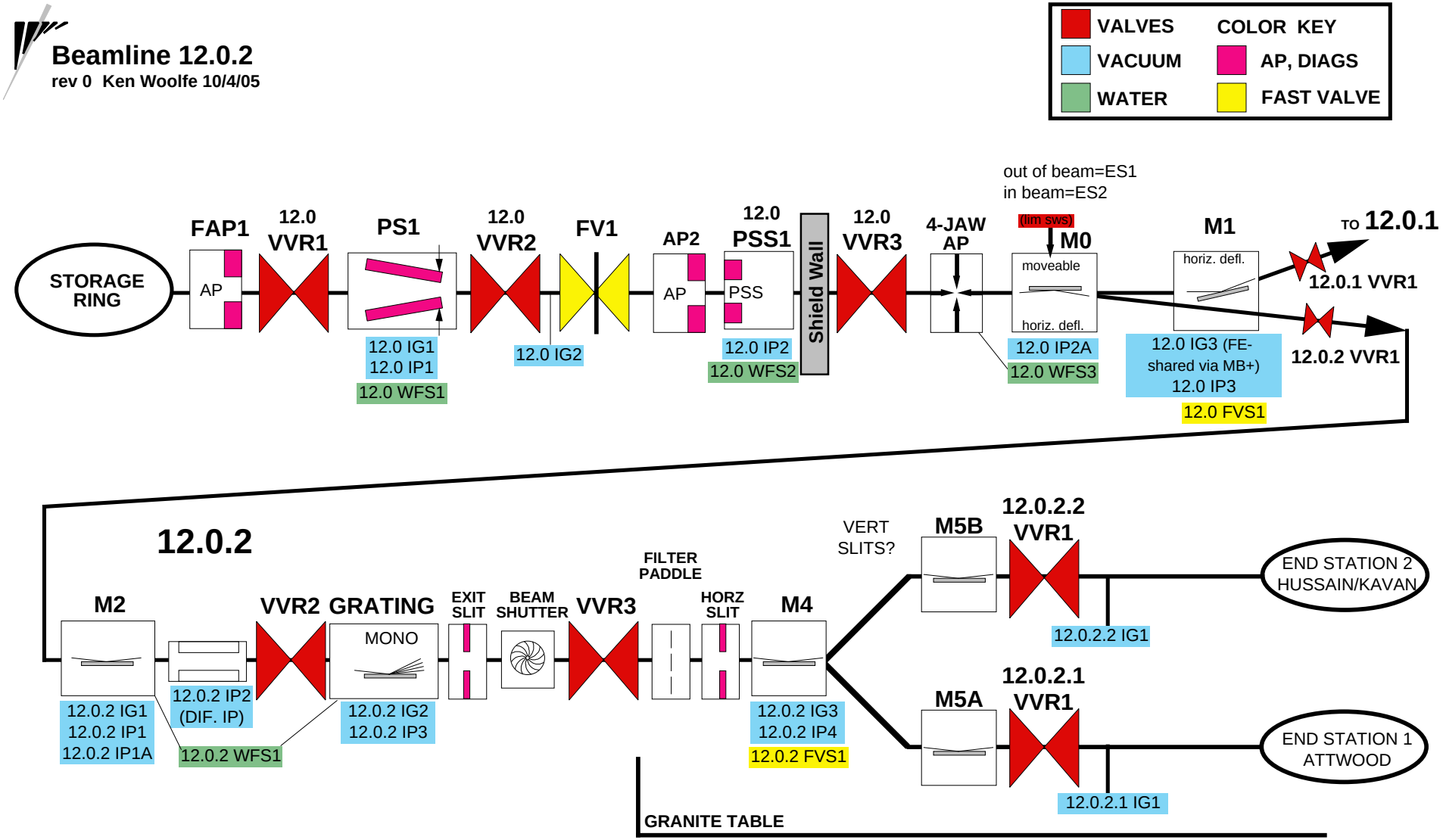

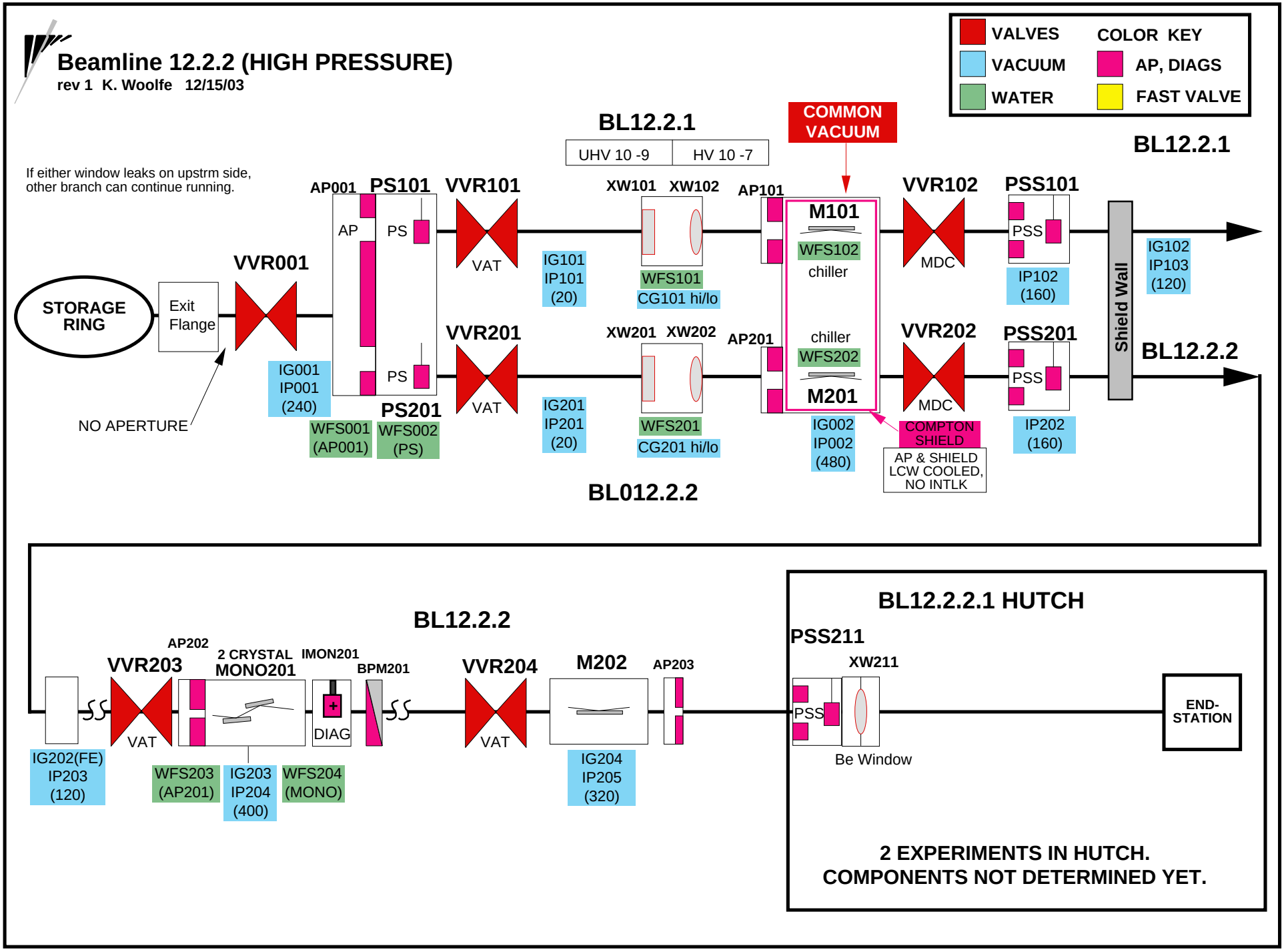
Beamline 12.2.2 (HIGH PRESSURE)
rev 1 K. Woolfe 12/15/03
VALVES
VACUUM
WATER
COLOR KEY
AP, DIAGS
FAST VALVE
BL12.2.1
UHV 10 -9
HV 10 -7
COMMON VACUUM
BL12.2.1
If either window leaks on upstrm side, other branch can continue running.
AP001
PS101
VVR101
XW101
XW102
AP101
M101
VVR102
PSS101
AP
PS
VAT
WFS102
chiller
MDC
PSS
IG101
IP101
(20)
WFS101
CG101 hi/lo
IP102
(160)
IG102
IP103
(120)
Shield Wall
STORAGE RING
Exit Flange
VVR001
VVR201
XW201
XW202
AP201
chiller
WFS202
M201
VVR202
PSS201
BL12.2.2
PS
VAT
MDC
PSS
IG001
IP001
(240)
PS201
IG201
IP201
(20)
WFS201
CG201 hi/lo
IG002
IP002
(480)
COMPTON SHIELD
AP & SHIELD LCW COOLED, NO INTLK
IP202
(160)
NO APERTURE
WFS001
(AP001)
WFS002
(PS)
BL012.2.2
BL12.2.2
AP202
2 CRYSTAL MONO201
IMON201
BPM201
VVR204
M202
AP203
VVR203
VAT
DIAG
VAT
IG202(FE)
IP203
(120)
WFS203
(AP201)
IG203
IP204
(400)
WFS204
(MONO)
IG204
IP205
(320)
BL12.2.2.1 HUTCH
PSS211
XW211
PSS
Be Window
END-STATION
2 EXPERIMENTS IN HUTCH.
COMPONENTS NOT DETERMINED YET.

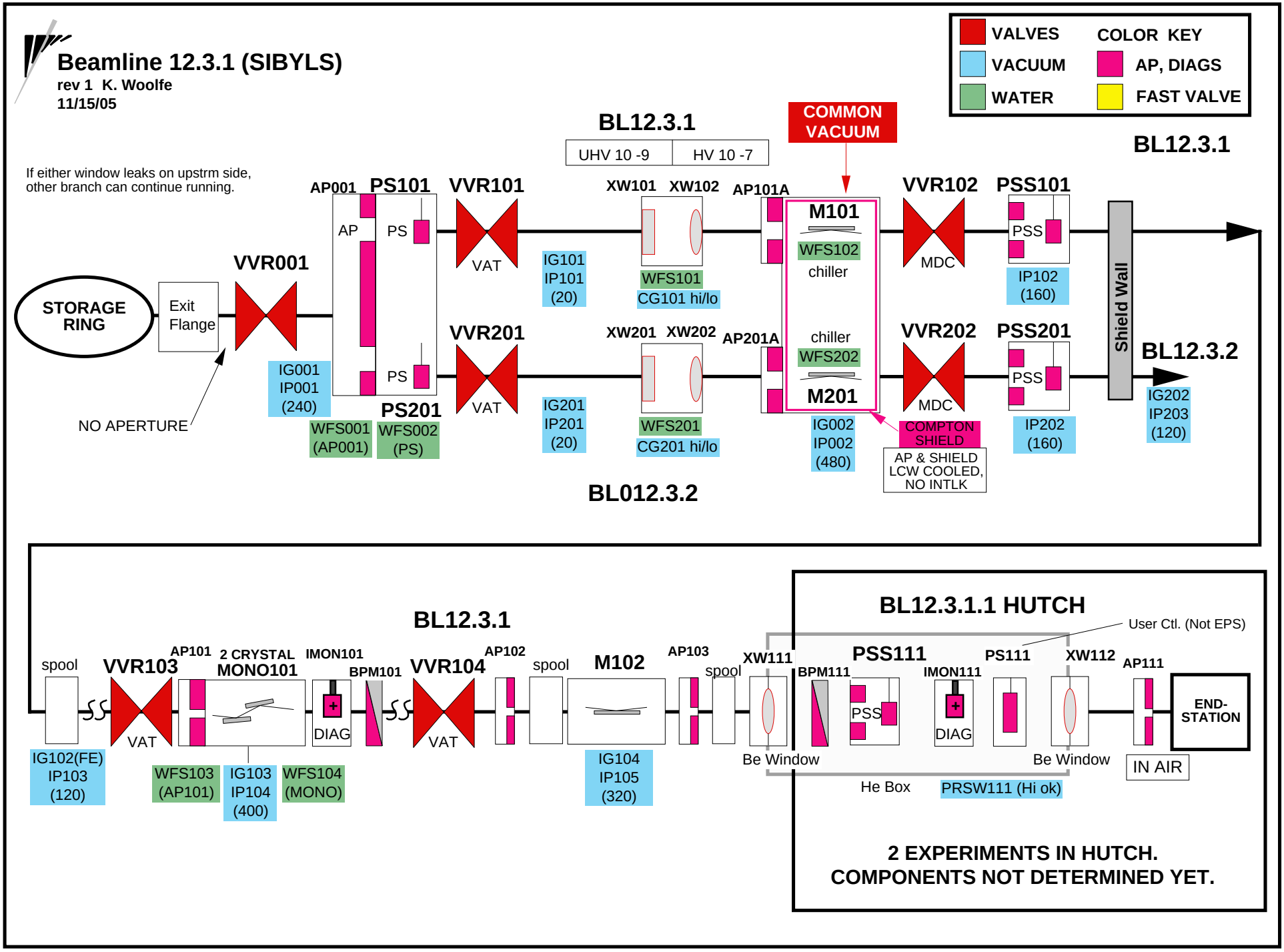
Beamline 12.3.1 (SIBYLS)
rev 1 K. Woolfe
11/15/05
VALVES
VACUUM
WATER
COLOR KEY
AP, DIAGS
FAST VALVE
BL12.3.1
UHV 10 -9
HV 10 -7
COMMON VACUUM
BL12.3.1
If either window leaks on upstrm side, other branch can continue running.
AP001
PS101
VVR101
XW101
XW102
AP101A
M101
VVR102
PSS101
AP
PS
VAT
WFS102
chiller
MDC
PSS
VVR001
STORAGE RING
Exit Flange
IG101
IP101
(20)
WFS101
CG101 hi/lo
IP102
(160)
Shield Wall
VVR201
XW201
XW202
AP201A
chiller
WFS202
M201
VVR202
PSS201
BL12.3.2
IG001
IP001
(240)
PS
VAT
IG201
IP201
(20)
WFS201
CG201 hi/lo
IG002
IP002
(480)
COMPTON SHIELD
AP & SHIELD LCW COOLED, NO INTLK
IP202
(160)
IG202
IP203
(120)
NO APERTURE
WFS001
(AP001)
PS201
WFS002
(PS)
BL012.3.2
BL12.3.1
spool
VVR103
AP101
2 CRYSTAL MONO101
IMON101
BPM101
VVR104
AP102
spool
M102
AP103
spool
XW111
BL12.3.1.1 HUTCH
User Ctl. (Not EPS)
PSS111
PS111
XW112
AP111
BPM111
IMON111
END-STATION
VAT
DIAG
VAT
PSS
DIAG
IG102(FE)
IP103
(120)
WFS103
(AP101)
IG103
IP104
(400)
WFS104
(MONO)
IG104
IP105
(320)
Be Window
Be Window
IN AIR
He Box
PRSW111 (Hi ok)
2 EXPERIMENTS IN HUTCH.
COMPONENTS NOT DETERMINED YET.

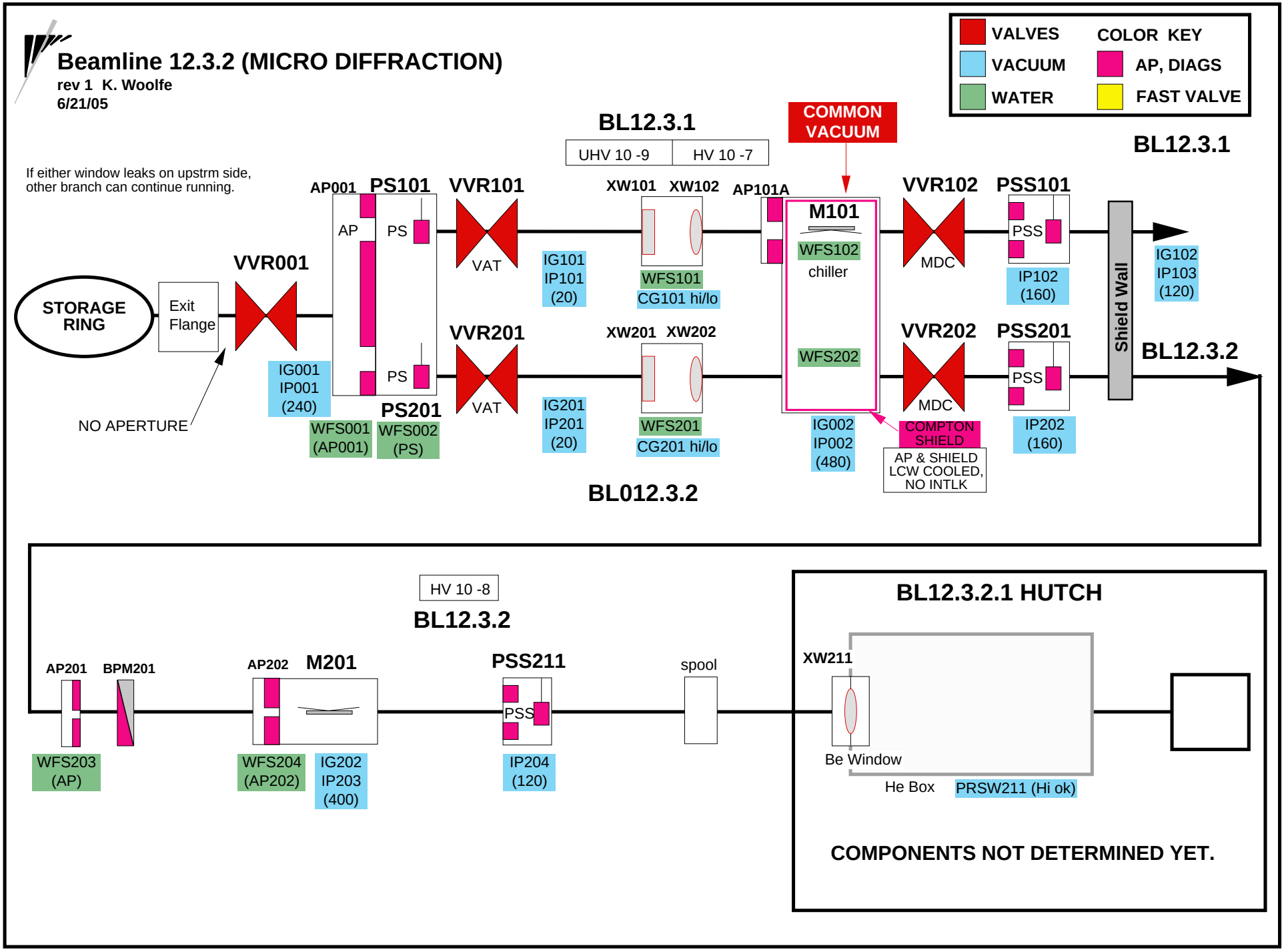
Beamline 12.3.2 (MICRO DIFFRACTION)
rev 1 K. Woolfe
6/21/05
VALVES
VACUUM
WATER
COLOR KEY
AP, DIAGS
FAST VALVE
BL12.3.1
UHV 10 -9
HV 10 -7
COMMON VACUUM
BL12.3.1
If either window leaks on upstrm side, other branch can continue running.
AP001
PS101
VVR101
XW101
XW102
AP101A
M101
VVR102
PSS101
AP
PS
VAT
WFS102
chiller
MDC
PSS
IG101
IP101
(20)
WFS101
CG101 hi/lo
IP102
(160)
IG102
IP103
(120)
Shield Wall
STORAGE RING
Exit Flange
VVR001
VVR201
XW201
XW202
VVR202
PSS201
BL12.3.2
IG001
IP001
(240)
PS
WFS202
MDC
PSS
NO APERTURE
PS201
VAT
IG201
IP201
(20)
WFS201
CG201 hi/lo
IG002
IP002
(480)
COMPTON SHIELD
AP & SHIELD LCW COOLED, NO INTLK
IP202
(160)
WFS001
(AP001)
WFS002
(PS)
BL012.3.2
HV 10 -8
BL12.3.2
BL12.3.2.1 HUTCH
AP201
BPM201
AP202
M201
PSS211
spool
XW211
PSS
WFS203
(AP)
WFS204
(AP202)
IG202
IP203
(400)
IP204
(120)
Be Window
He Box
PRSW211 (Hi ok)
COMPONENTS NOT DETERMINED YET.