Beamline 10.3.1
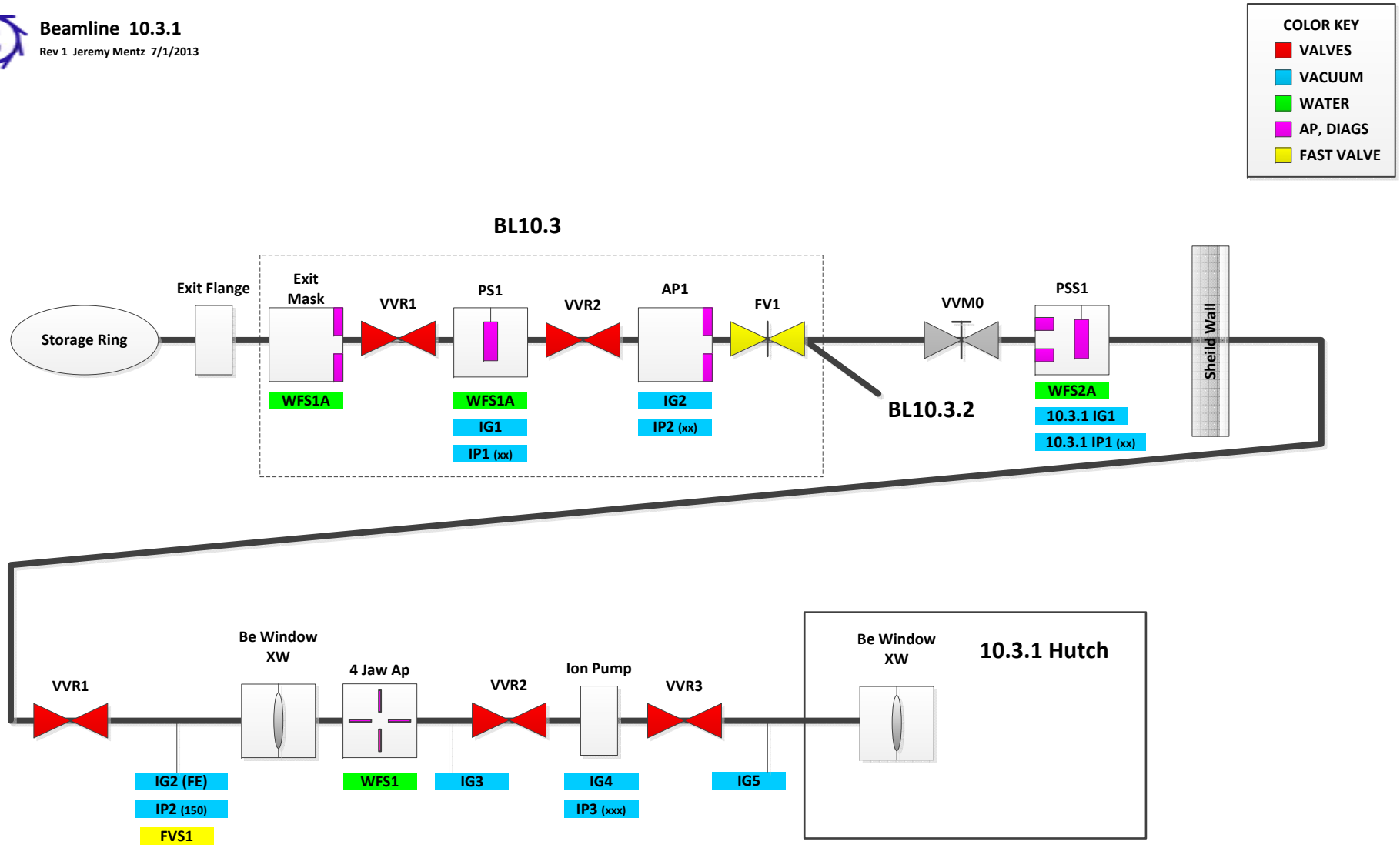
Rev 1 Jeremy Mentz 7/1/2013