Beamline 3.3.2
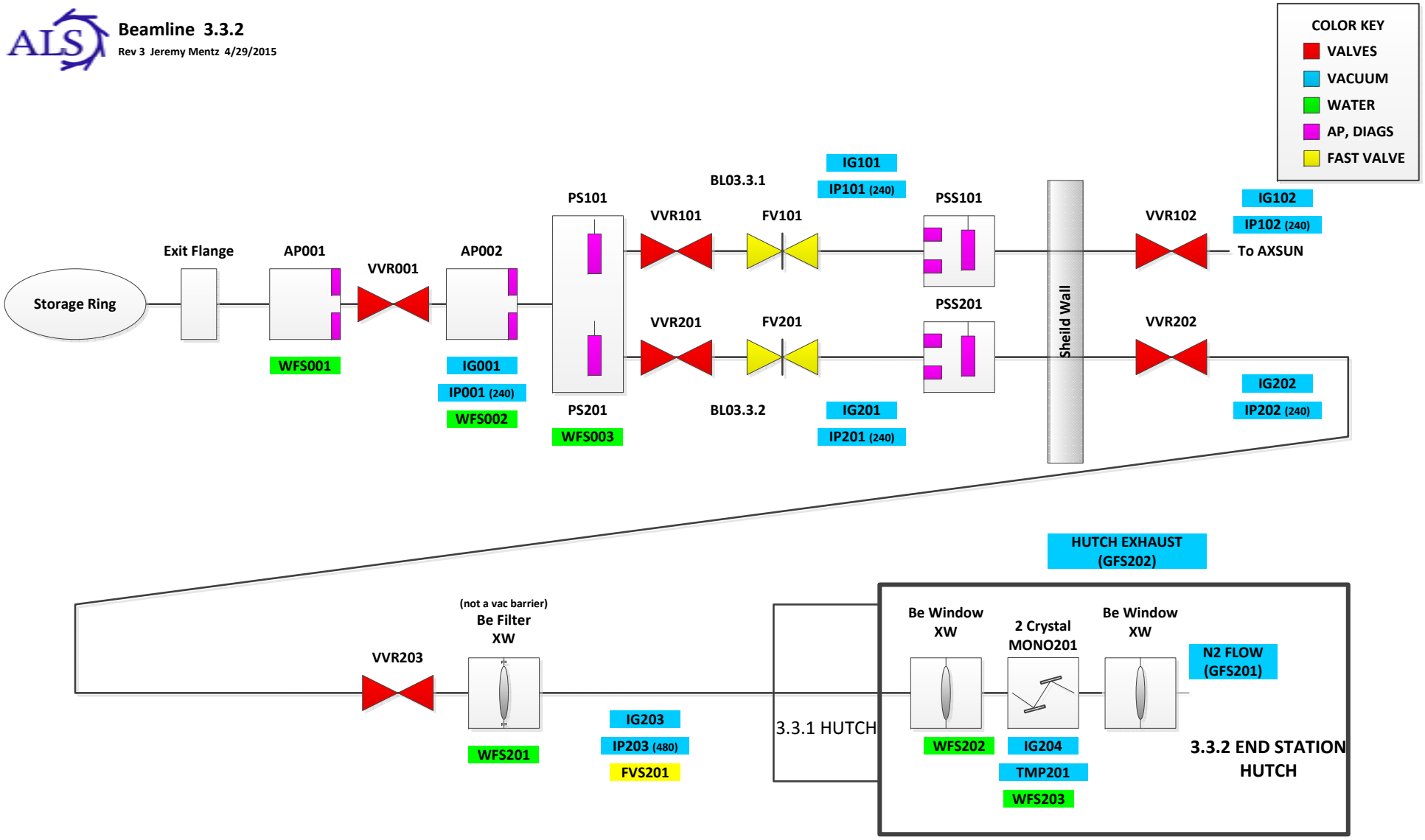
Rev 3 Jeremy Mentz 4/29/2015