ALS-EPS-S01 (Control)

Sector 01 Equipment Protection System

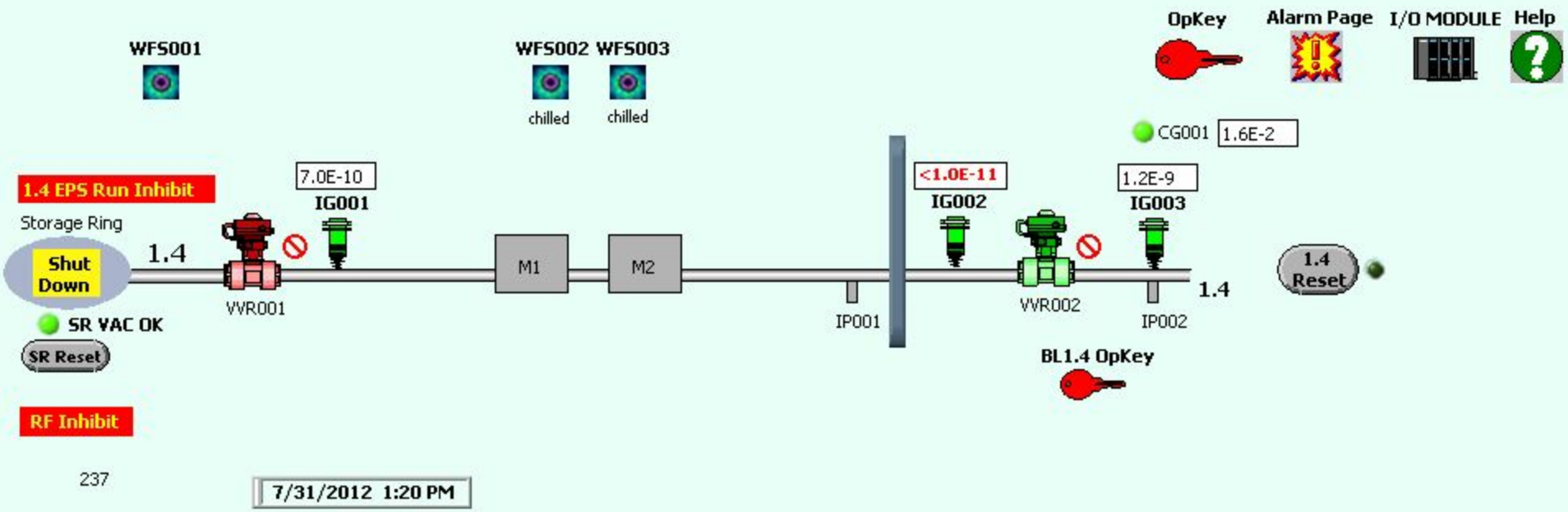

ALS-EPS-S02 (Control)

Sector 02 **Shutter Status** 7/31/2012 1:21 PM

Sector 02 Equipment Protection System

OpKey Alarm Page I/O MODULE Help

WFS001 WFS002 WFS003

FVS201

Shield Wall

2.1 EPS Run Inhibit

Storage Ring

Shut Down

2.1

4.0E-10 IG001

READY

6.9E-10 IG201

5.7E-10 IG202

VVR001 PS201 IP001 VVR201 FV201 IP201 PSS201 VVR202 IP202

2.1.2

SR VAC OK

SR Reset

RF Inhibit

401

BL2.1 BL2.1.2

EPS Online EPS Online

EPS Offline EPS Offline

2.1 Reset

USER PERMITS

2.1.2

Valve Permit

Shutter Permit

ALS-EPS-S02 (Control)

Sector 02 **Shutter Status** 7/31/2012 1:31 PM

Warning - This display must not be used for any radiation safety-related decisions. For such decisions, look directly at the RSS (personnel safety shutter) chassis indicator lights. Failure to follow this practice could lead to a safety incident!

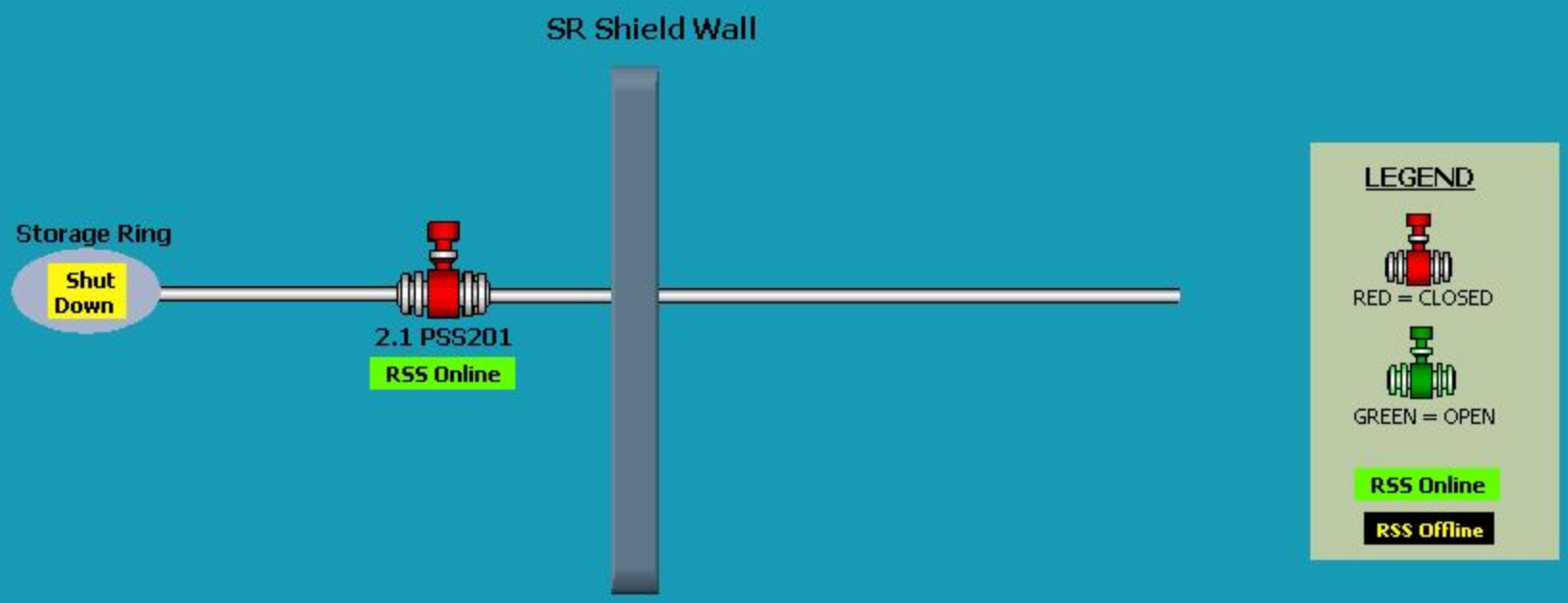

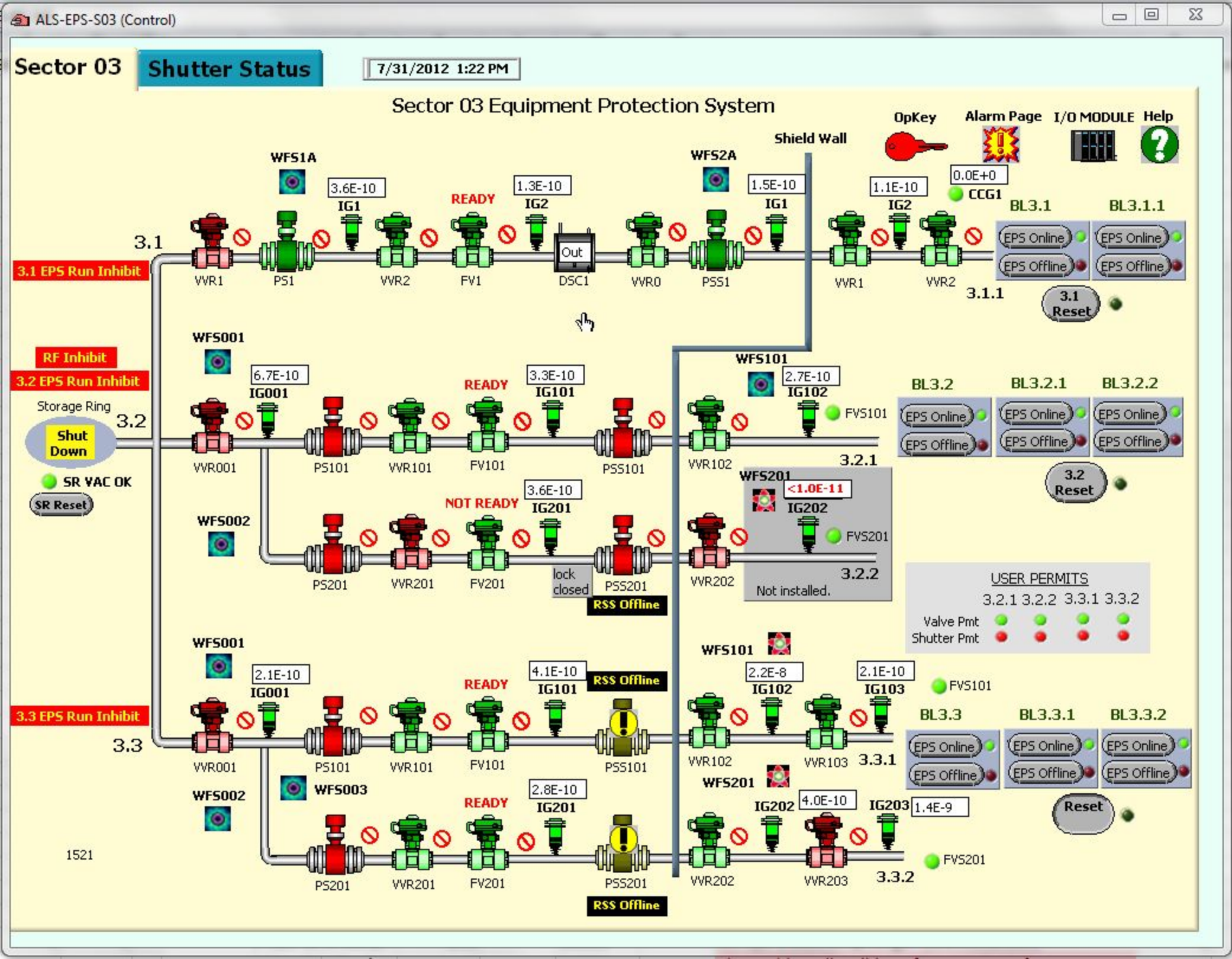
ALS-EPS-S03 (Control)
Sector 03
Shutter Status
7/31/2012 1:22 PM
Sector 03 Equipment Protection System
OpKey
Alarm Page
I/O MODULE
Help
Shield Wall
WFS1A
3.6E-10
IG1
READY
1.3E-10
IG2
Out
1.5E-10
IG1
WFS2A
1.1E-10
IG2
0.0E+0
CCG1
BL3.1
BL3.1.1
3.1
3.1 EPS Run Inhibit
VVR1
PS1
VVR2
FV1
DSC1
VVR0
PSS1
VVR1
VVR2
EPS Online
EPS Offline
3.1.1
3.1 Reset
RF Inhibit
3.2 EPS Run Inhibit
Storage Ring
Shut Down
SR VAC OK
SR Reset
3.2
WFS001
6.7E-10
IG001
READY
3.3E-10
IG101
WFS101
2.7E-10
IG102
FVS101
BL3.2
BL3.2.1
BL3.2.2
VVR001
PS101
VVR101
FV101
PSS101
VVR102
3.2.1
3.2 Reset
WFS002
NOT READY
3.6E-10
IG201
WFS201
<1.0E-11
IG202
FVS201
PS201
VVR201
FV201
lock closed
PSS201
RSS Offline
VVR202
3.2.2
Not installed.
USER PERMITS
3.2.1 3.2.2 3.3.1 3.3.2
Valve Pmt
Shutter Pmt
WFS001
2.1E-10
IG001
READY
4.1E-10
IG101
RSS Offline
WFS101
2.2E-8
IG102
2.1E-10
IG103
FVS101
3.3 EPS Run Inhibit
3.3
VVR001
PS101
VVR101
FV101
PSS101
VVR102
VVR103
3.3.1
BL3.3
BL3.3.1
BL3.3.2
WFS002
WFS003
READY
2.8E-10
IG201
WFS201
IG202
4.0E-10
IG203
1.4E-9
Reset
1521
PS201
VVR201
FV201
PSS201
RSS Offline
VVR202
VVR203
3.3.2
FVS201

ALS-EPS-S03 (Control)

Sector 03 **Shutter Status** 7/31/2012 1:32 PM

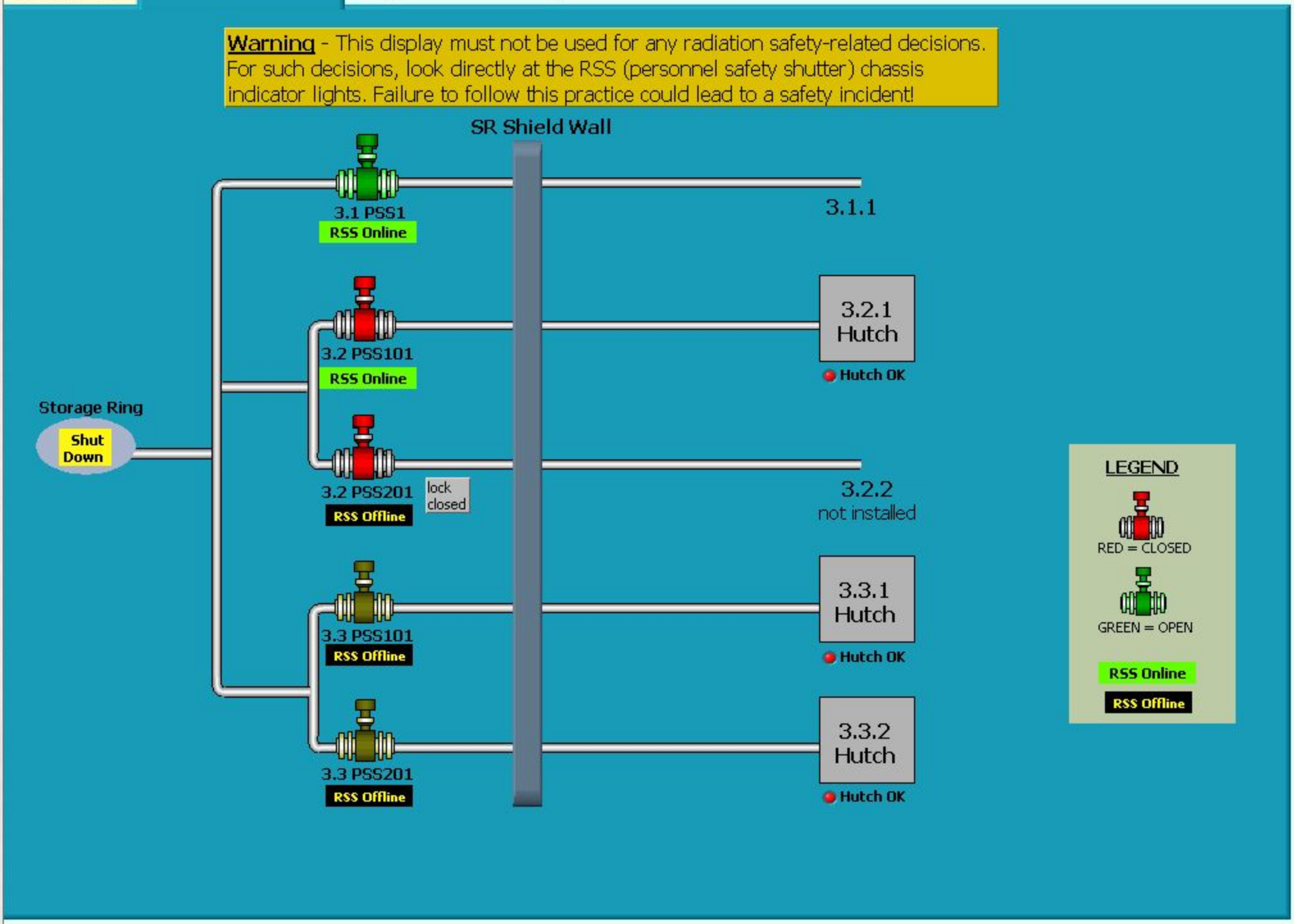

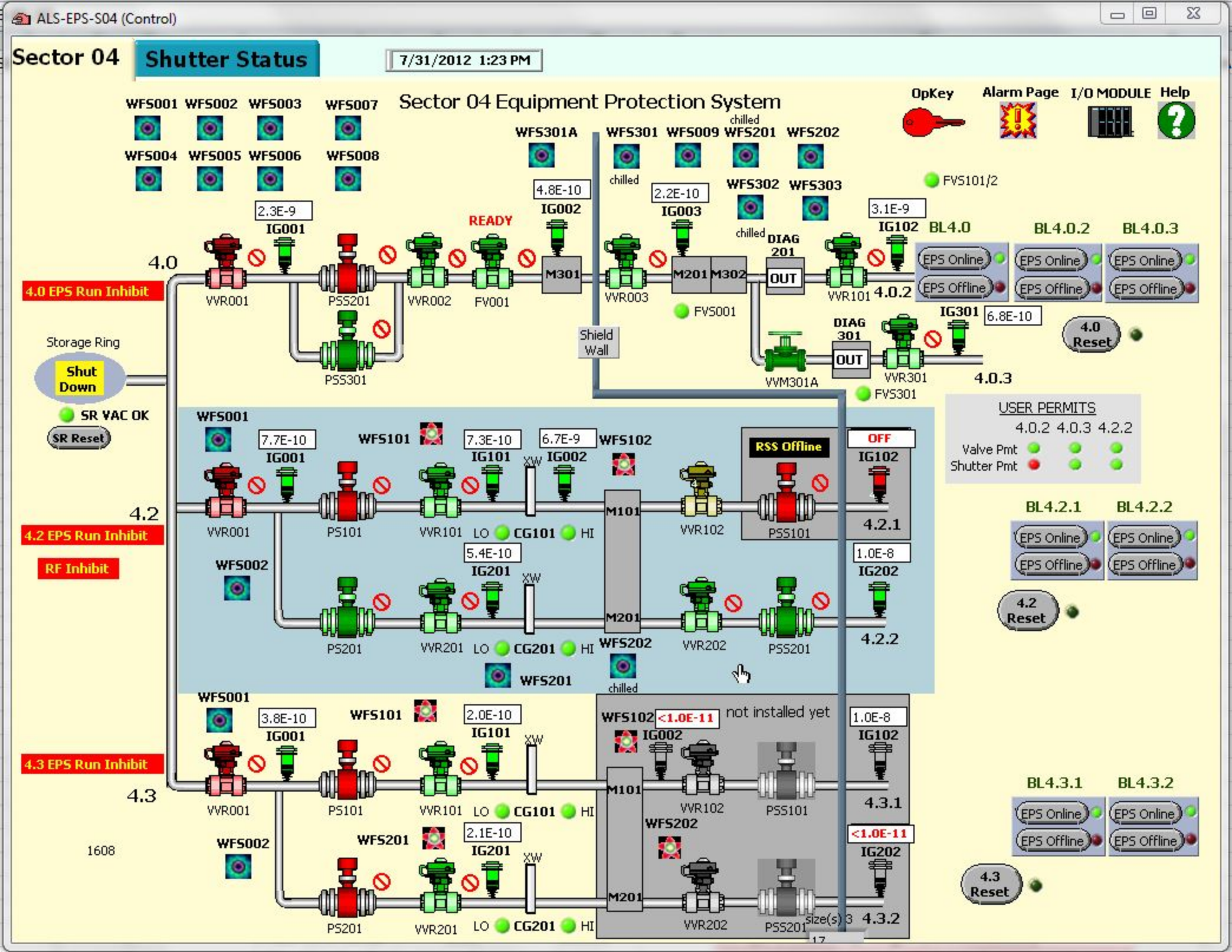
ALS-EPS-S04 (Control)
Sector 04
Shutter Status
7/31/2012 1:23 PM
Sector 04 Equipment Protection System
OpKey
Alarm Page
I/O MODULE
Help
WFS001 WFS002 WFS003 WFS007
WFS004 WFS005 WFS006 WFS008
WFS301A
WFS301 WFS009 WFS201 WFS202
chilled
WFS302 WFS303
FVS101/2
4.8E-10
IG002
2.3E-9
IG001
READY
2.2E-10
IG003
3.1E-9
IG102
BL4.0
BL4.0.2
BL4.0.3
4.0
4.0 EPS Run Inhibit
VVR001
PSS201
VVR002
FV001
M301
VVR003
M201 M302
FVS001
DIAG 201
OUT
VVR101
4.0.2
EPS Online
EPS Offline
IG301
6.8E-10
4.0 Reset
PSS301
Shield Wall
DIAG 301
VVM301A
VVR301
FVS301
4.0.3
Storage Ring
Shut Down
SR VAC OK
SR Reset
USER PERMITS
4.0.2 4.0.3 4.2.2
Valve Pmt
Shutter Pmt
WFS001
7.7E-10
IG001
WFS101
7.3E-10
IG101
6.7E-9
IG002
WFS102
RSS Offline
OFF
IG102
4.2
4.2 EPS Run Inhibit
RF Inhibit
VVR001
PS101
VVR101
LO
CG101
HI
M101
VVR102
PSS101
4.2.1
BL4.2.1
BL4.2.2
WFS002
5.4E-10
IG201
1.0E-8
IG202
M201
PS201
VVR201
CG201
WFS202
VVR202
PSS201
4.2.2
4.2 Reset
WFS201
chilled
WFS001
3.8E-10
IG001
WFS101
2.0E-10
IG101
WFS102
<1.0E-11
not installed yet
IG002
1.0E-8
IG102
4.3 EPS Run Inhibit
4.3
VVR001
PS101
VVR101
CG101
M101
VVR102
PSS101
4.3.1
BL4.3.1
BL4.3.2
WFS202
WFS002
WFS201
2.1E-10
IG201
<1.0E-11
IG202
1608
M201
PS201
VVR201
CG201
VVR202
PSS201
4.3.2
4.3 Reset

ALS-EPS-S04 (Control)

Sector 04 **Shutter Status** 7/31/2012 1:33 PM

Warning - This display must not be used for any radiation safety-related decisions. For such decisions, look directly at the RSS (personnel safety shutter) chassis indicator lights. Failure to follow this practice could lead to a safety incident!

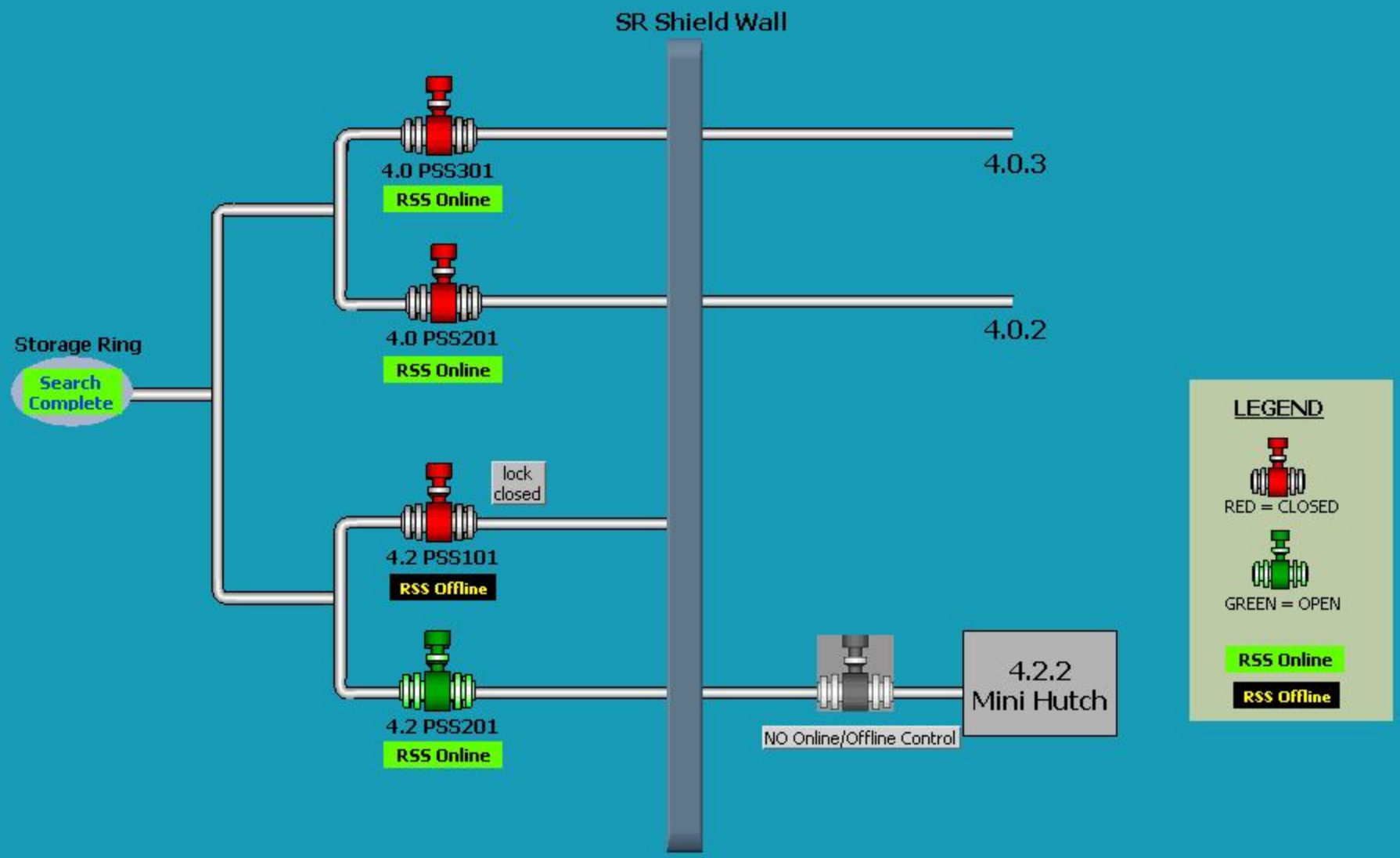

size(s) 3

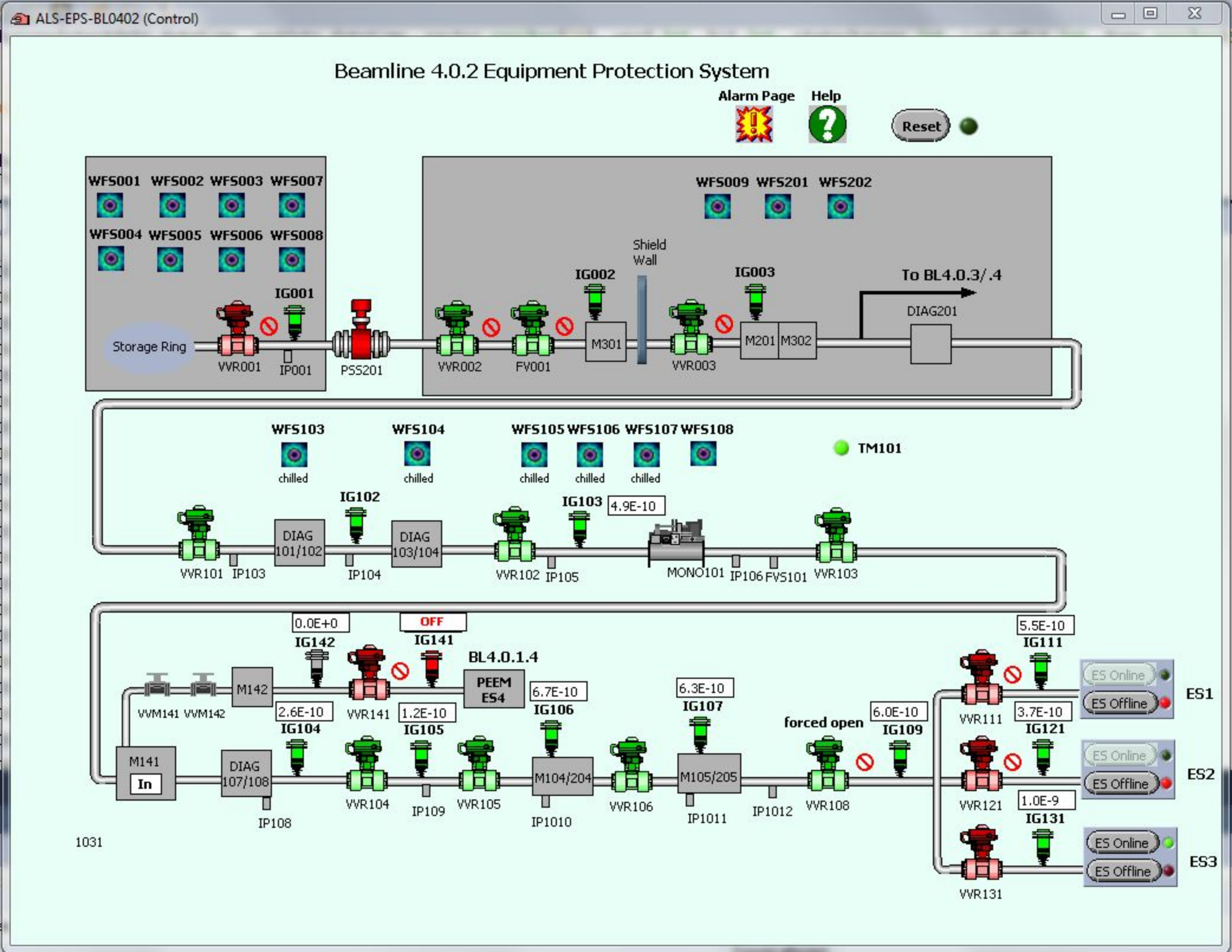
ALS-EPS-BL0402 (Control)
Beamline 4.0.2 Equipment Protection System
Alarm Page
Help
Reset
WFS001 WFS002 WFS003 WFS007
WFS004 WFS005 WFS006 WFS008
IG001
Storage Ring
VVR001
IP001
PSS201
WFS009 WFS201 WFS202
Shield Wall
IG002
IG003
To BL4.0.3/.4
DIAG201
VVR002
FV001
M301
VVR003
M201
M302
WFS103
WFS104
WFS105 WFS106 WFS107 WFS108
TM101
chilled
IG102
IG103
4.9E-10
DIAG 101/102
DIAG 103/104
VVR101
IP103
IP104
VVR102
IP105
MONO101
IP106
FVS101
VVR103
0.0E+0
OFF
IG142
IG141
BL4.0.1.4
PEEM ES4
5.5E-10
IG111
M142
VVM141
VVM142
2.6E-10
IG104
VVR141
1.2E-10
IG105
6.7E-10
IG106
6.3E-10
IG107
forced open
6.0E-10
IG109
VVR111
3.7E-10
IG121
ES Online
ES Offline
ES1
ES2
ES3
M141
In
DIAG 107/108
IP108
VVR104
IP109
VVR105
M104/204
IP1010
VVR106
M105/205
IP1011
IP1012
VVR108
VVR121
1.0E-9
IG131
VVR131
1031

ALS-EPS-BL04032 (Control)

BL4.0.3 ES2

Beamline 4.0.3 Equipment Protection System

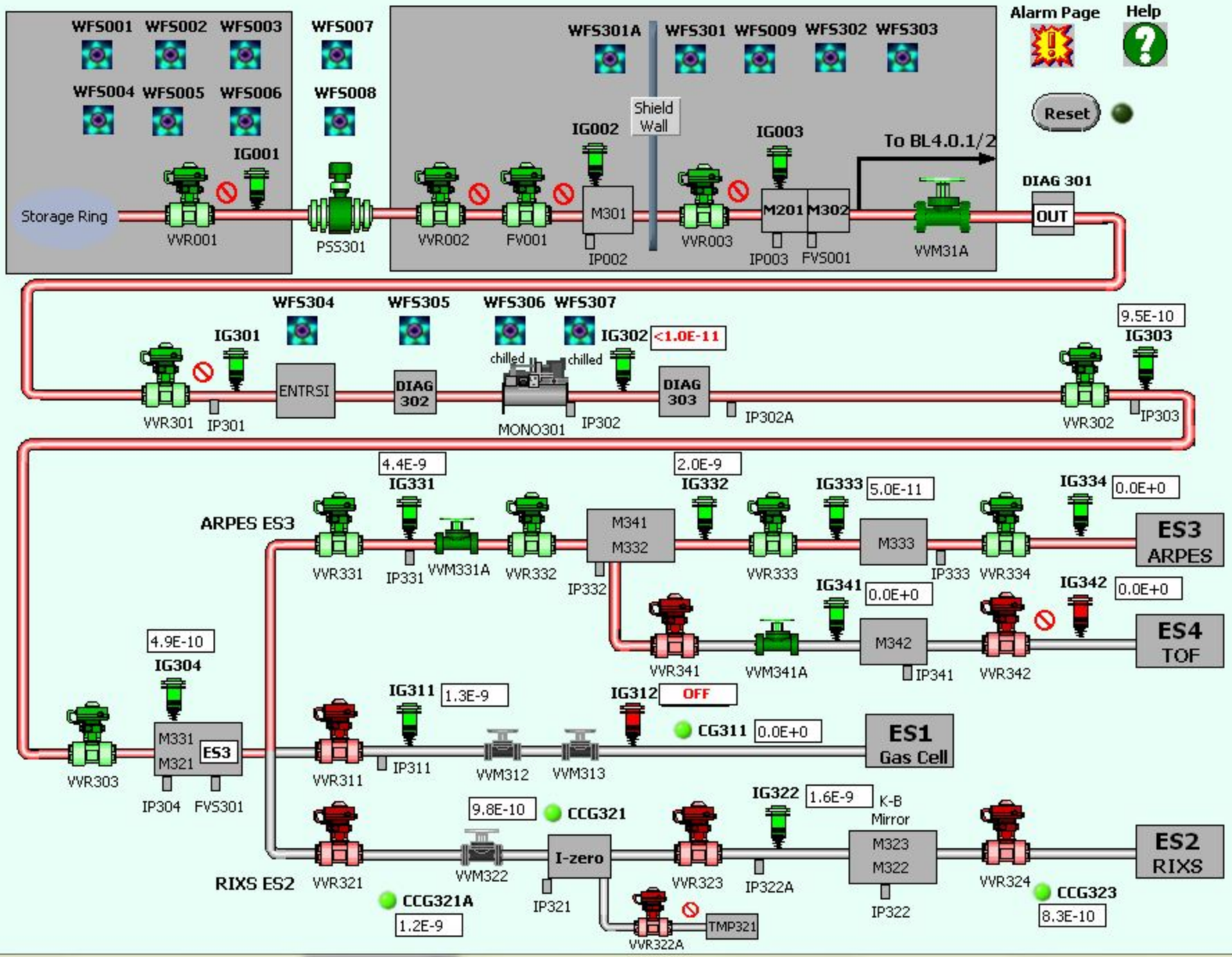

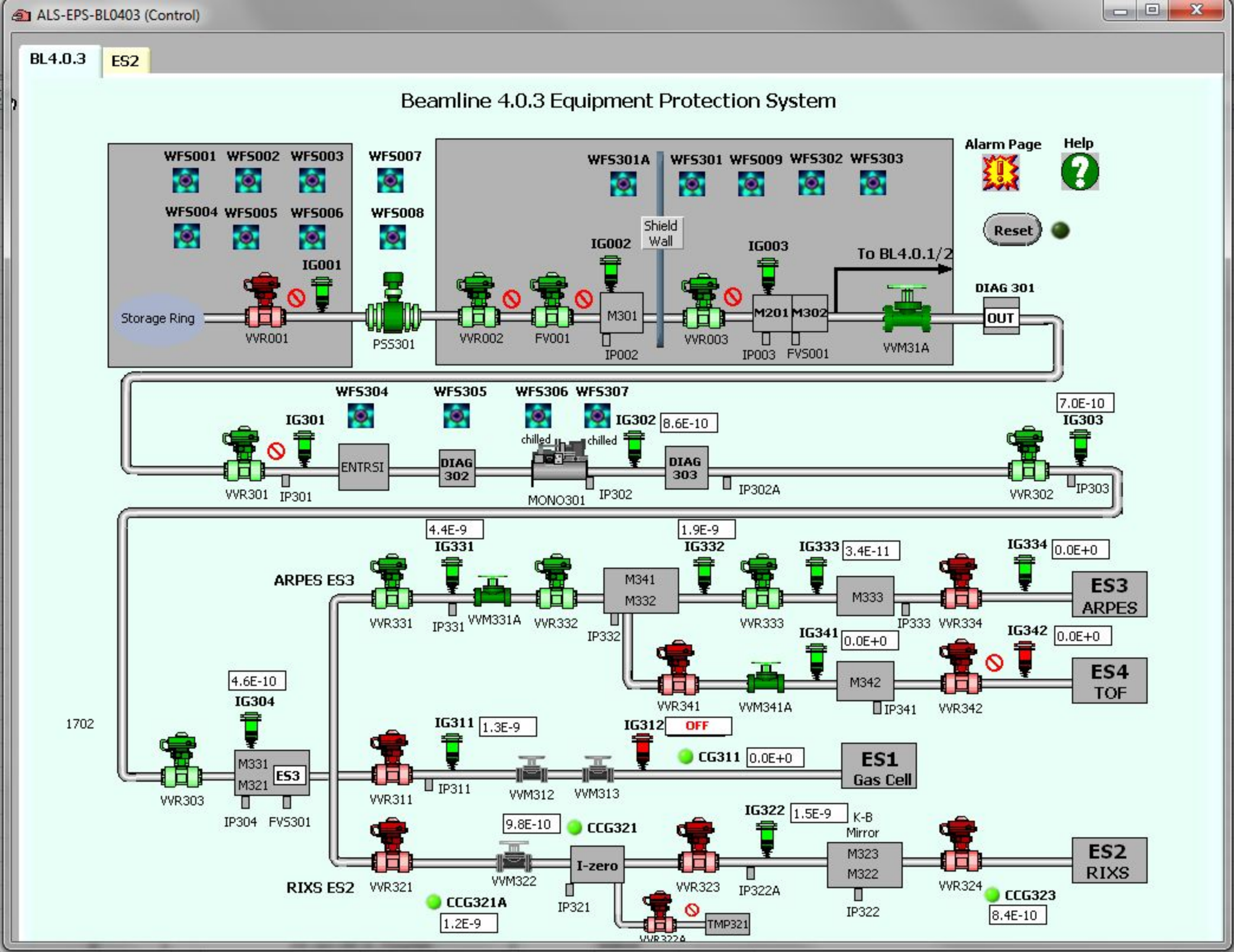
ALS-EPS-BL0403 (Control)
BL4.0.3
ES2
Beamline 4.0.3 Equipment Protection System
Alarm Page
Help
Reset
WFS001 WFS002 WFS003
WFS004 WFS005 WFS006
WFS007
WFS008
WFS301A WFS301 WFS009 WFS302 WFS303
Shield Wall
IG001
IG002
IG003
To BL4.0.1/2
DIAG 301
OUT
Storage Ring
VVR001
PSS301
VVR002
FV001
M301
IP002
VVR003
M201 M302
IP003 FVS001
VVM31A
WFS304 WFS305 WFS306 WFS307
IG301
IG302
8.6E-10
7.0E-10
IG303
chilled
chilled
ENTRSI
DIAG 302
DIAG 303
VVR301 IP301
MONO301 IP302
IP302A
VVR302 IP303
4.4E-9
IG331
1.9E-9
IG332
IG333
3.4E-11
IG334
0.0E+0
ARPES ES3
M341 M332
M333
ES3 ARPES
VVR331 IP331 VVM331A VVR332 IP332
VVR333 IP333 VVR334
IG341
0.0E+0
IG342
0.0E+0
ES4 TOF
VVR341 VVM341A M342 IP341 VVR342
4.6E-10
IG304
1702
M331 M321 ES3
VVR303 IP304 FVS301
IG311
1.3E-9
IG312
OFF
CG311
0.0E+0
ES1 Gas Cell
VVR311 IP311 VVM312 VVM313
9.8E-10
CCG321
IG322
1.5E-9
K-B Mirror
ES2 RIXS
RIXS ES2
VVR321 VVM322 I-zero VVR323 IP322A M323 M322 VVR324
CCG321A
1.2E-9
IP321
TMP321
IP322
CCG323
8.4E-10

ALS-EPS-BL0403 (Control)

BL4.0.3 ES2

BL0403 ES2 EPS

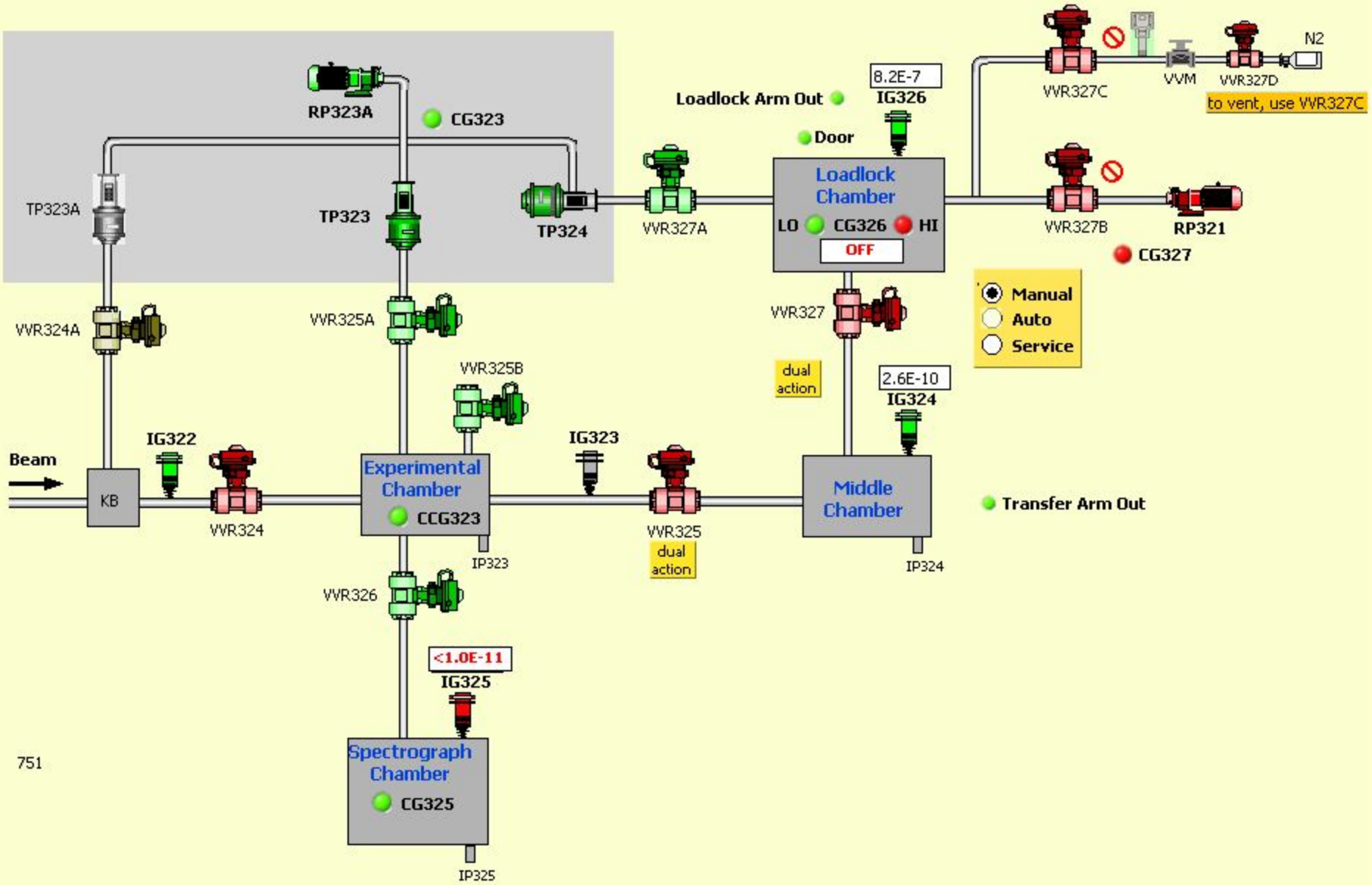

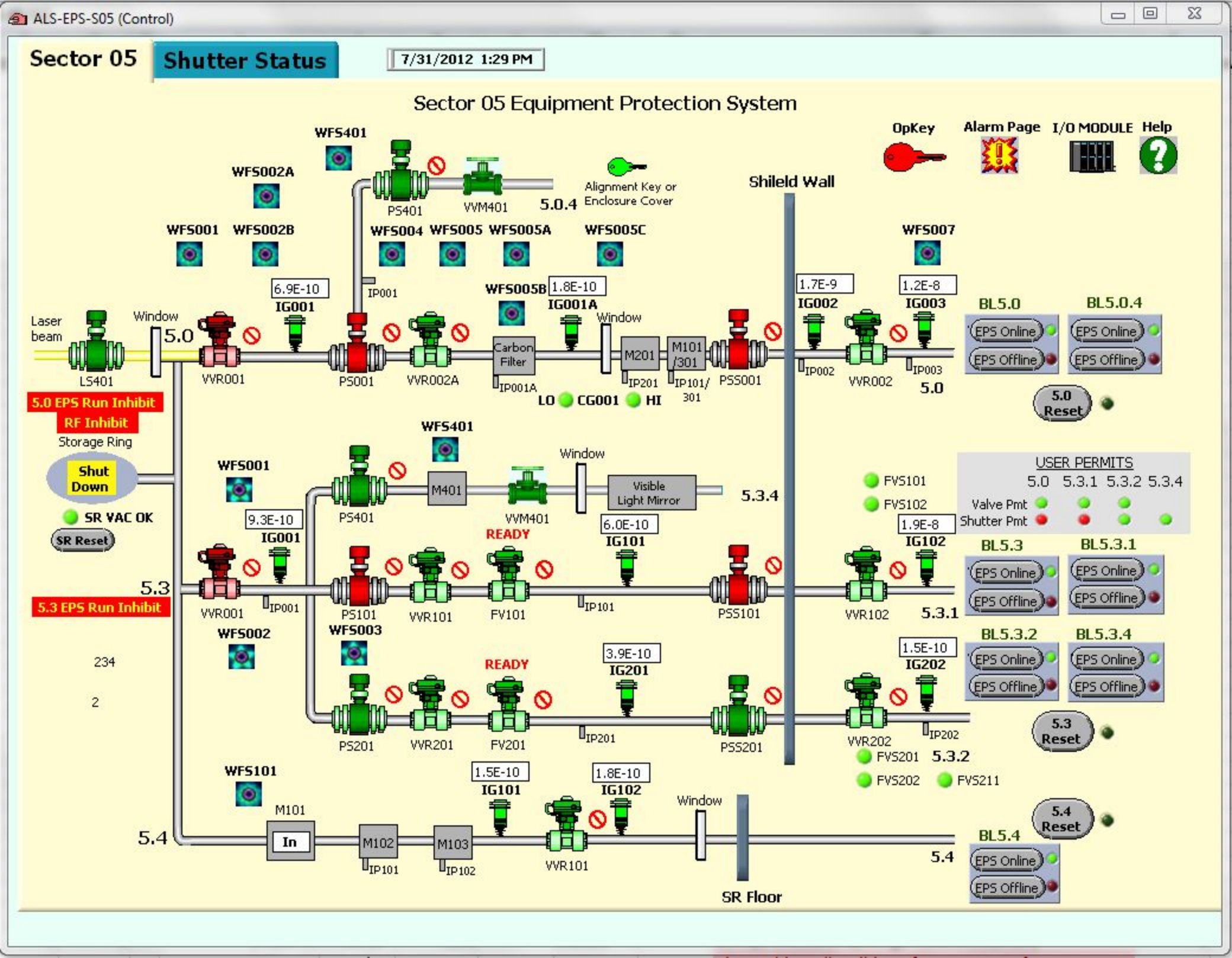
ALS-EPS-S05 (Control)
Sector 05
Shutter Status
7/31/2012 1:29 PM
Sector 05 Equipment Protection System
OpKey
Alarm Page
I/O MODULE
Help
Alignment Key or Enclosure Cover
Shield Wall
WFS401
WFS002A
WFS001
WFS002B
WFS004
WFS005
WFS005A
WFS005C
WFS007
WFS005B
PS401
VVM401
5.0.4
IP001
6.9E-10
IG001
1.8E-10
IG001A
1.7E-9
IG002
1.2E-8
IG003
Laser beam
Window
5.0
LS401
VVR001
PS001
VVR002A
Carbon Filter
IP001A
LO
CG001
HI
M201
IP201
M101 /301
IP101/ 301
PSS001
IP002
VVR002
IP003
5.0
BL5.0
BL5.0.4
EPS Online
EPS Offline
5.0 Reset
5.0 EPS Run Inhibit
RF Inhibit
Storage Ring
Shut Down
SR VAC OK
SR Reset
WFS401
WFS001
M401
VVM401
Window
Visible Light Mirror
5.3.4
PS401
9.3E-10
IG001
READY
6.0E-10
IG101
1.9E-8
IG102
5.3
5.3 EPS Run Inhibit
VVR001
IP001
PS101
VVR101
FV101
IP101
PSS101
VVR102
5.3.1
WFS002
WFS003
234
2
READY
3.9E-10
IG201
1.5E-10
IG202
PS201
VVR201
FV201
IP201
PSS201
VVR202
IP202
FVS201
5.3.2
FVS202
FVS211
FVS101
FVS102
USER PERMITS
5.0 5.3.1 5.3.2 5.3.4
Valve Pmt
Shutter Pmt
BL5.3
BL5.3.1
BL5.3.2
BL5.3.4
5.3 Reset
WFS101
M101
In
M102
IP101
M103
IP102
1.5E-10
IG101
1.8E-10
IG102
VVR101
Window
5.4
5.4 Reset
BL5.4
SR Floor

ALS-EPS-S05 (Control)

Sector 05 **Shutter Status** 7/31/2012 1:30 PM

Warning - This display must not be used for any radiation safety-related decisions. For such decisions, look directly at the RSS (personnel safety shutter) chassis indicator lights. Failure to follow this practice could lead to a safety incident!

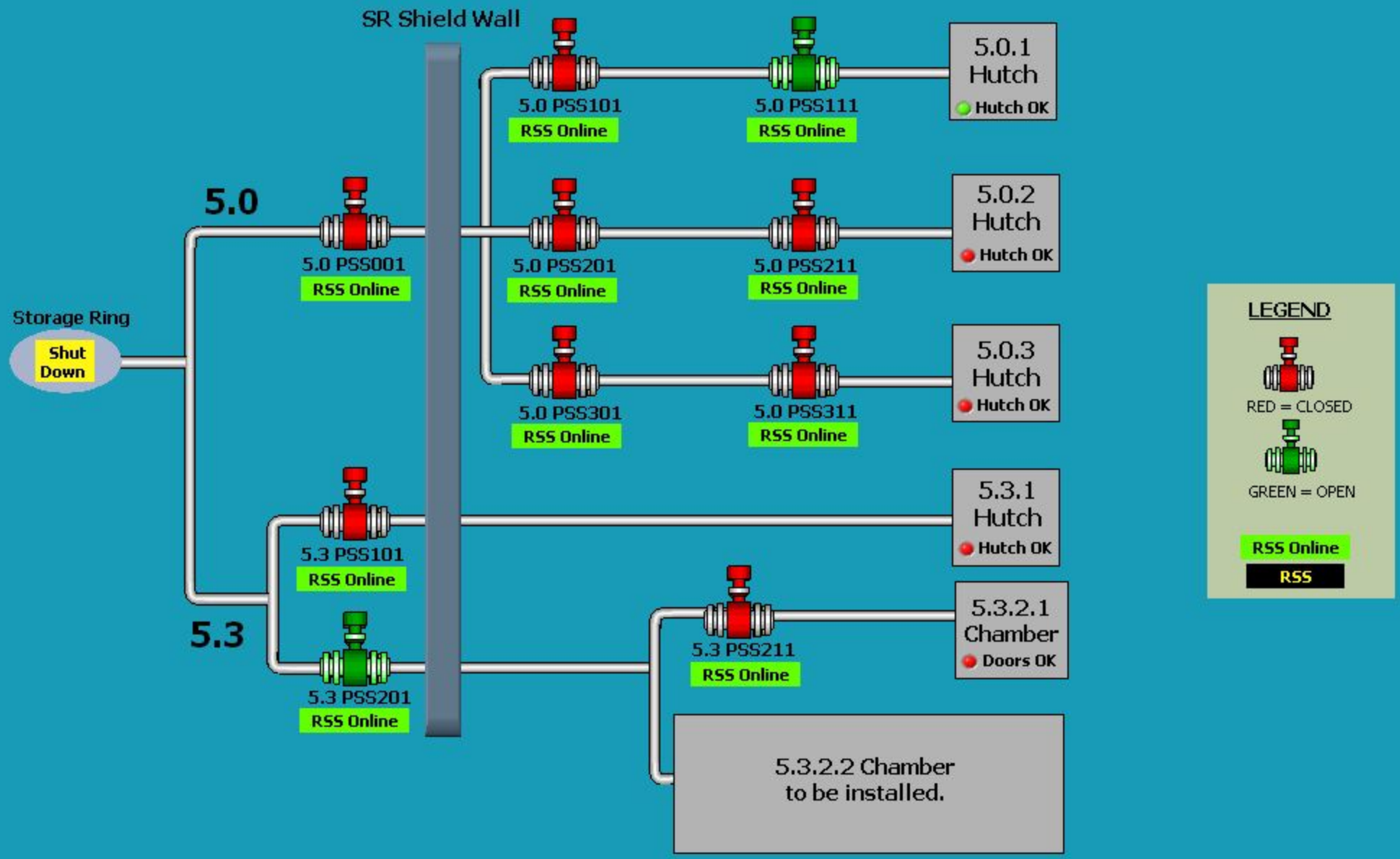

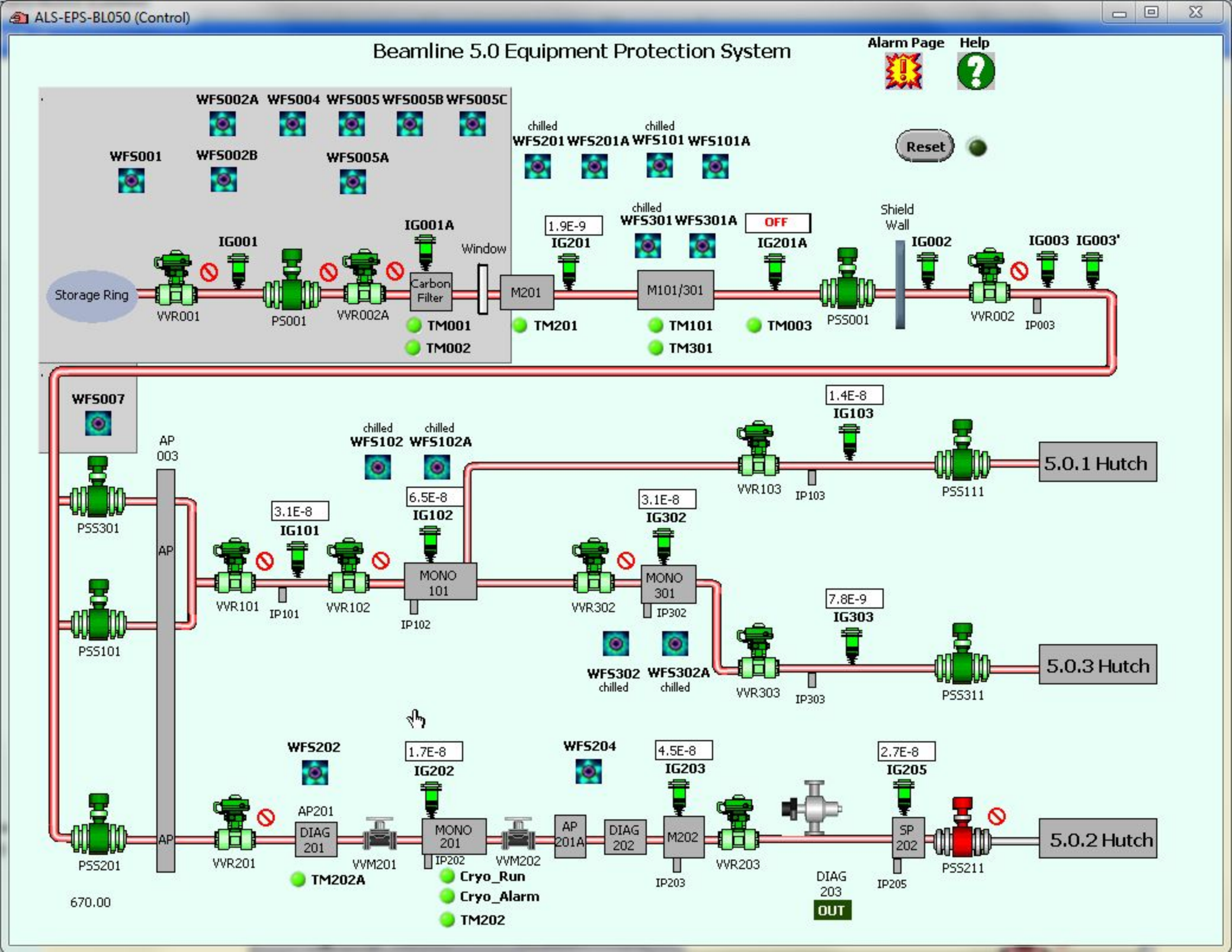
ALS-EPS-BL050 (Control)
Beamline 5.0 Equipment Protection System
Alarm Page
Help
Reset
WFS002A WFS004 WFS005 WFS005B WFS005C
WFS001
WFS002B
WFS005A
chilled
WFS201 WFS201A
chilled
WFS101 WFS101A
chilled
WFS301 WFS301A
OFF
IG001A
IG001
Window
1.9E-9
IG201
IG201A
Shield Wall
IG002
IG003 IG003'
Storage Ring
VVR001
PS001
VVR002A
Carbon Filter
M201
M101/301
PSS001
VVR002
IP003
TM001
TM002
TM201
TM101
TM301
TM003
WFS007
AP 003
chilled
WFS102 WFS102A
1.4E-8
IG103
5.0.1 Hutch
VVR103
IP103
PSS111
PSS301
3.1E-8
IG101
6.5E-8
IG102
3.1E-8
IG302
AP
VVR101
IP101
VVR102
MONO 101
IP102
VVR302
MONO 301
IP302
7.8E-9
IG303
PSS101
WFS302 WFS302A
chilled chilled
VVR303
IP303
PSS311
5.0.3 Hutch
WFS202
1.7E-8
IG202
WFS204
4.5E-8
IG203
2.7E-8
IG205
AP201
DIAG 201
MONO 201
AP 201A
DIAG 202
M202
SP 202
PSS201
VVR201
VVM201
IP202
VVM202
VVR203
IP203
IP205
PSS211
5.0.2 Hutch
TM202A
Cryo_Run
Cryo_Alarm
TM202
DIAG 203
OUT
670.00

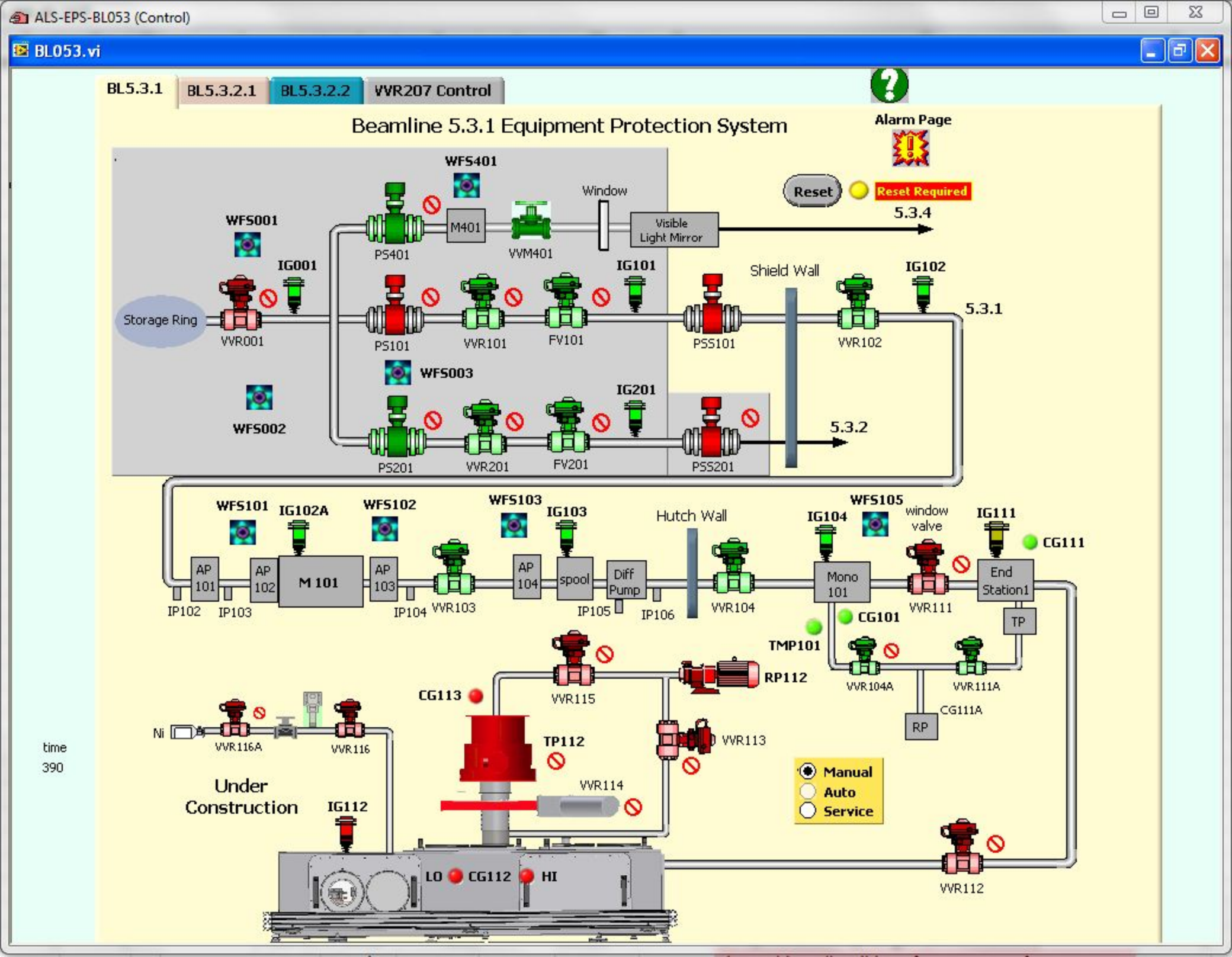
ALS-EPS-BL053 (Control)
BL053.vi
BL5.3.1
BL5.3.2.1
BL5.3.2.2
VVR207 Control
Beamline 5.3.1 Equipment Protection System
Alarm Page
Reset
Reset Required
5.3.4
5.3.1
5.3.2
WFS401
WFS001
WFS003
WFS002
Window
M401
Visible Light Mirror
PS401
VVM401
IG001
IG101
IG102
IG201
Storage Ring
VVR001
PS101
VVR101
FV101
PSS101
VVR102
Shield Wall
PS201
VVR201
FV201
PSS201
WFS101
IG102A
WFS102
WFS103
IG103
Hutch Wall
IG104
WFS105
window valve
IG111
CG111
AP 101
AP 102
M 101
AP 103
AP 104
spool
Diff Pump
Mono 101
End Station1
IP102
IP103
IP104
VVR103
IP105
IP106
VVR104
VVR111
CG101
TP
TMP101
VVR104A
VVR111A
CG111A
RP
RP112
CG113
VVR115
VVR113
Ni
VVR116A
VVR116
time
390
Under Construction
IG112
TP112
VVR114
Manual
Auto
Service
LO
CG112
HI
VVR112

ALS-EPS-BL053 (Control)

BL053.vi

BL5.3.1 | BL5.3.2.1 | BL5.3.2.2 | VVR207 Control

Beamline 5.3.2.1 Equipment Protection System

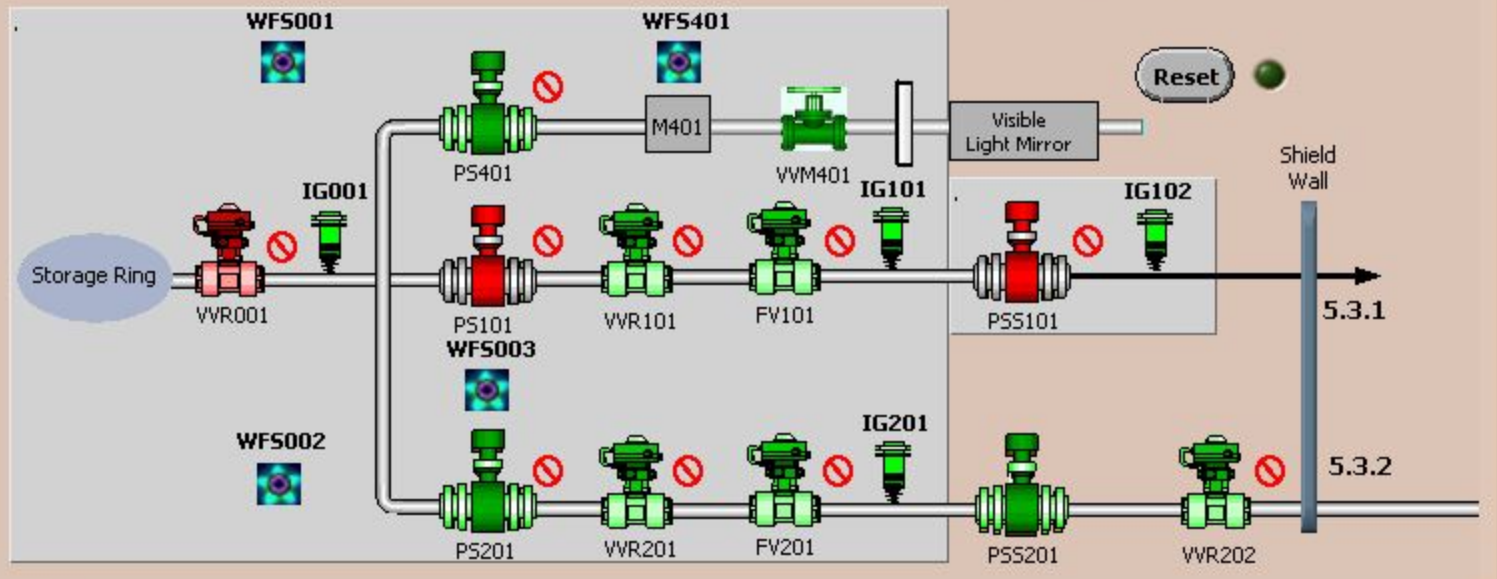

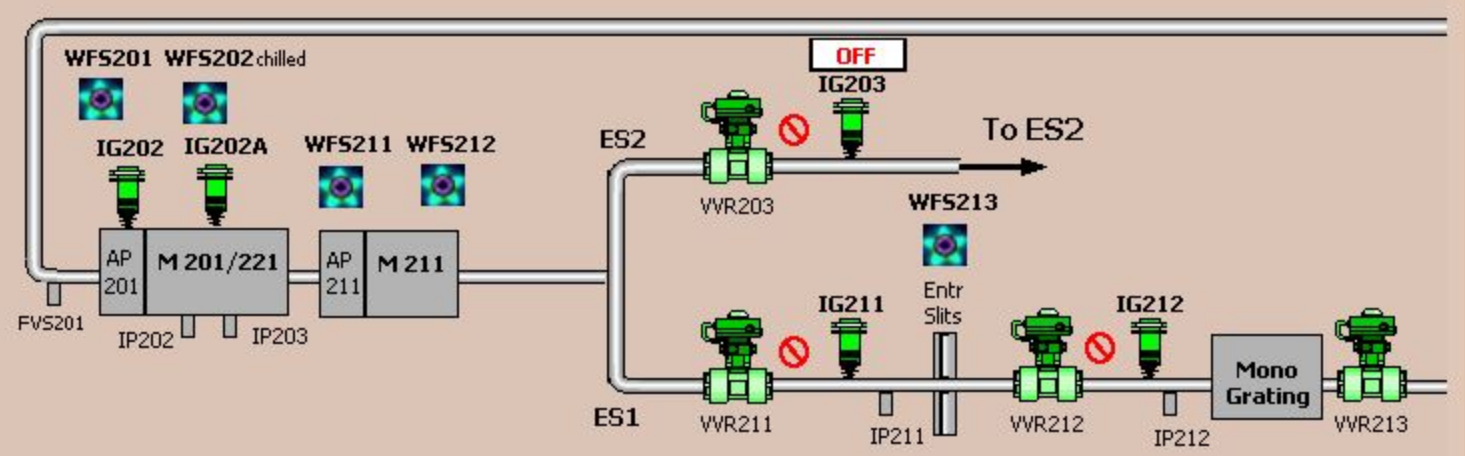

time
199

time
601

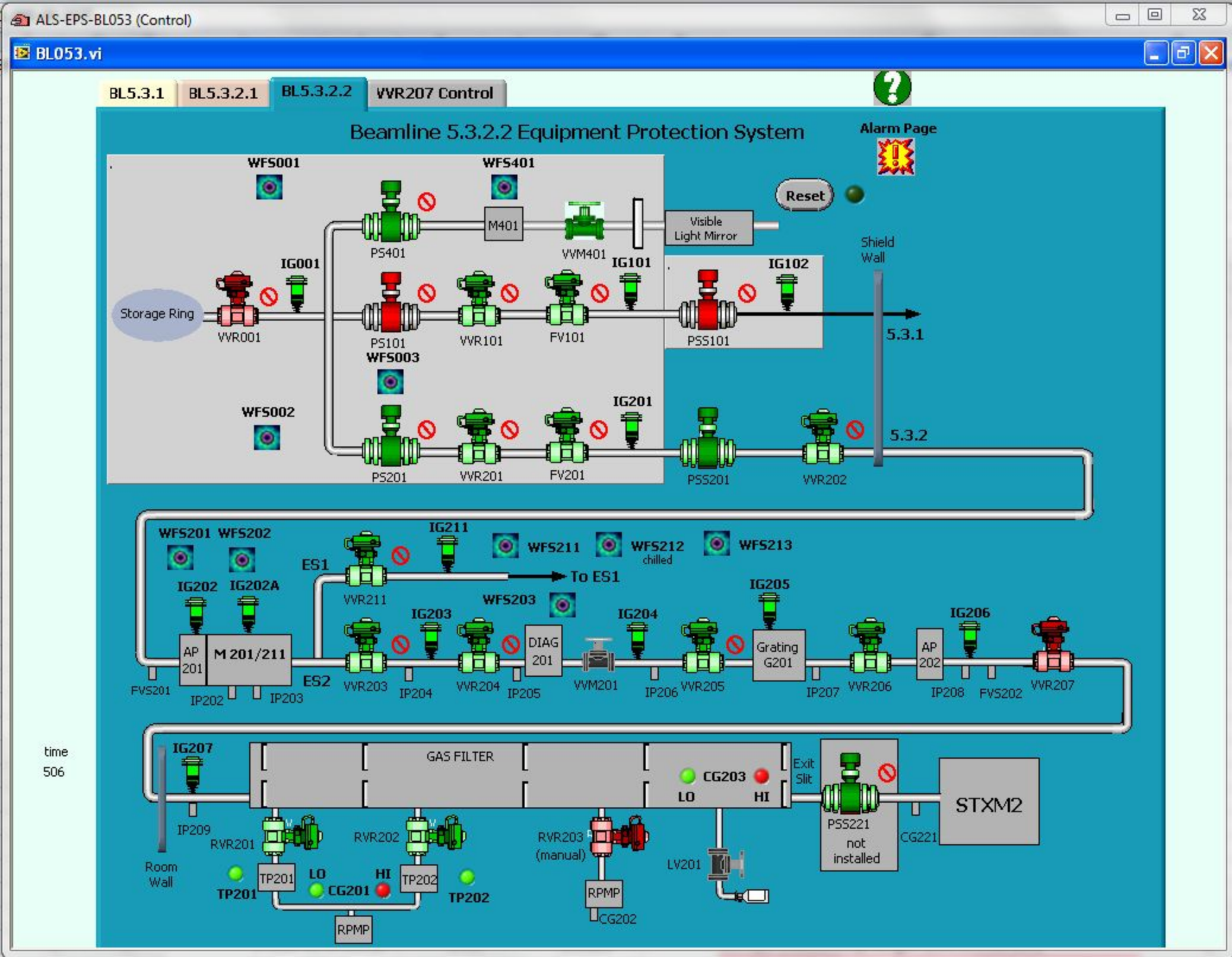
ALS-EPS-BL053 (Control)
BL053.vi
BL5.3.1
BL5.3.2.1
BL5.3.2.2
VVR207 Control
Beamline 5.3.2.2 Equipment Protection System
Alarm Page
Reset
WFS001
WFS401
M401
Visible Light Mirror
PS401
VVM401
IG101
IG102
Shield Wall
IG001
Storage Ring
VVR001
PS101
VVR101
FV101
PSS101
5.3.1
WFS003
WFS002
IG201
PS201
VVR201
FV201
PSS201
VVR202
5.3.2
WFS201
WFS202
IG211
WFS211
WFS212
chilled
WFS213
ES1
To ES1
IG202
IG202A
VVR211
IG205
WFS203
IG203
IG204
IG206
AP 201
M 201/211
DIAG 201
Grating G201
AP 202
FVS201
IP202
IP203
ES2
VVR203
IP204
VVR204
IP205
VVM201
IP206
VVR205
IP207
VVR206
IP208
FVS202
VVR207
time
506
IG207
GAS FILTER
CG203
LO
HI
Exit Slit
STXM2
IP209
RVR201
RVR202
RVR203
(manual)
PSS221
not installed
CG221
Room Wall
TP201
LO
HI
CG201
TP202
LV201
RPMP
CG202

ALS-EPS-BL053 (Control)

BL053.vi

BL5.3.1 | BL5.3.2.1 | BL5.3.2.2 | VVR207 Control

VVR207 Open

VVR207 Close

BEAM

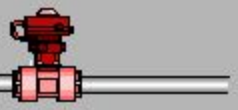

VVR207

time

156

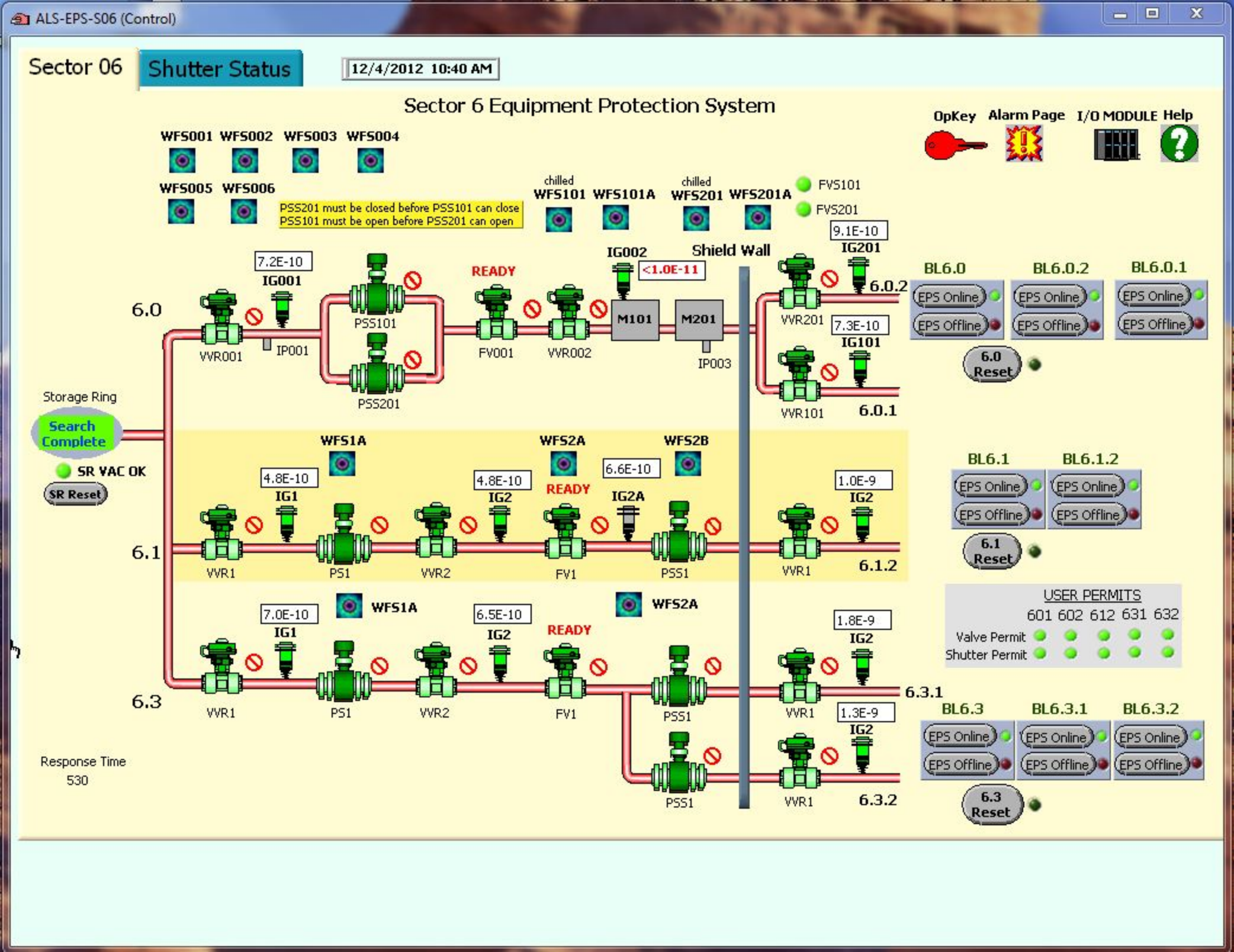
ALS-EPS-S06 (Control)
Sector 06
Shutter Status
12/4/2012 10:40 AM
Sector 6 Equipment Protection System
OpKey
Alarm Page
I/O MODULE
Help
WFS001 WFS002 WFS003 WFS004
WFS005 WFS006
PSS201 must be closed before PSS101 can close
PSS101 must be open before PSS201 can open
chilled
WFS101 WFS101A
chilled
WFS201 WFS201A
FVS101
FVS201
Shield Wall
IG002
<1.0E-11
7.2E-10
IG001
READY
9.1E-10
IG201
6.0
6.0.2
VVR001
IP001
PSS101
PSS201
FV001
VVR002
M101
M201
IP003
VVR201
7.3E-10
IG101
VVR101
6.0.1
BL6.0
BL6.0.2
BL6.0.1
EPS Online
EPS Offline
6.0 Reset
Storage Ring
Search Complete
SR VAC OK
SR Reset
WFS1A
WFS2A
WFS2B
4.8E-10
IG1
4.8E-10
IG2
READY
6.6E-10
IG2A
1.0E-9
IG2
6.1
VVR1
PS1
VVR2
FV1
PSS1
VVR1
6.1.2
BL6.1
BL6.1.2
6.1 Reset
USER PERMITS
601 602 612 631 632
Valve Permit
Shutter Permit
7.0E-10
IG1
WFS1A
6.5E-10
IG2
READY
WFS2A
1.8E-9
IG2
6.3
VVR1
PS1
VVR2
FV1
PSS1
VVR1
6.3.1
1.3E-9
IG2
PSS1
VVR1
6.3.2
BL6.3
BL6.3.1
BL6.3.2
6.3 Reset
Response Time
530

ALS-EPS-S06 (Control)

Sector 06 | Shutter Status | 7/31/2012 1:39 PM

Warning - This display must not be used for any radiation safety-related decisions. For such decisions, look directly at the RSS (personnel safety shutter) chassis indicator lights. Failure to follow this practice could lead to a safety incident!

Storage Ring
Shut Down

6.0 PSS101
RSS Online

6.0 PSS201
RSS Offline

6.0 PSS111
RSS Online
Hutch OK
6.0.1 Hutch

6.0 PSS202
RSS Offline
Hutch OK
6.0.2 Hutch

SR Shield Wall

6.1.2 PSS1
RSS Online
6.1.2

6.3.1 PSS1
RSS Online
6.3.1

6.3.2 PSS1
RSS Online
6.3.2

LEGEND
RED = CLOSED
GREEN = OPEN
RSS Online
RSS Offline

ALS-EPS-BL060 (Control)

BL060.vi

BL6.0.1 | BL6.0.2 | Laser

7/31/2012 5:22 PM

Beamline 6.0.1 Equipment Protection System

Alarm Page | Help | I/O MODULE

Reset

WFS001 WFS002 WFS003 WFS004

WFS005 WFS006

chilled WFS101 WFS101A

chilled WFS201 WFS201A

IG002

To BL6.0.2

IG001

Storage Ring

VVR001

PSS101

FV001

VVR002

M101

M201

VVR101

Shield Wall

BR1 Service

WFS102A

FE IG101

WFS102

WFS103 WFS104 WFS104A

1.6E-7 IG102

WFS105

Chopper OK

AP 102A

IP101 FVS101

AP 102

DIFF IP102

VVR102

AP 103

Chopper

TMP101

4 Jaw Slit

VVR103

AP 104

chilled WFS106

8.9E-9 IG103

3.4E-7 IG104

DIAG 101

IP103

MONO101

DIAG 102

VVR104

PSS111

M104

IP104

Be Window

XW 101

ES1

Hutch OK

776

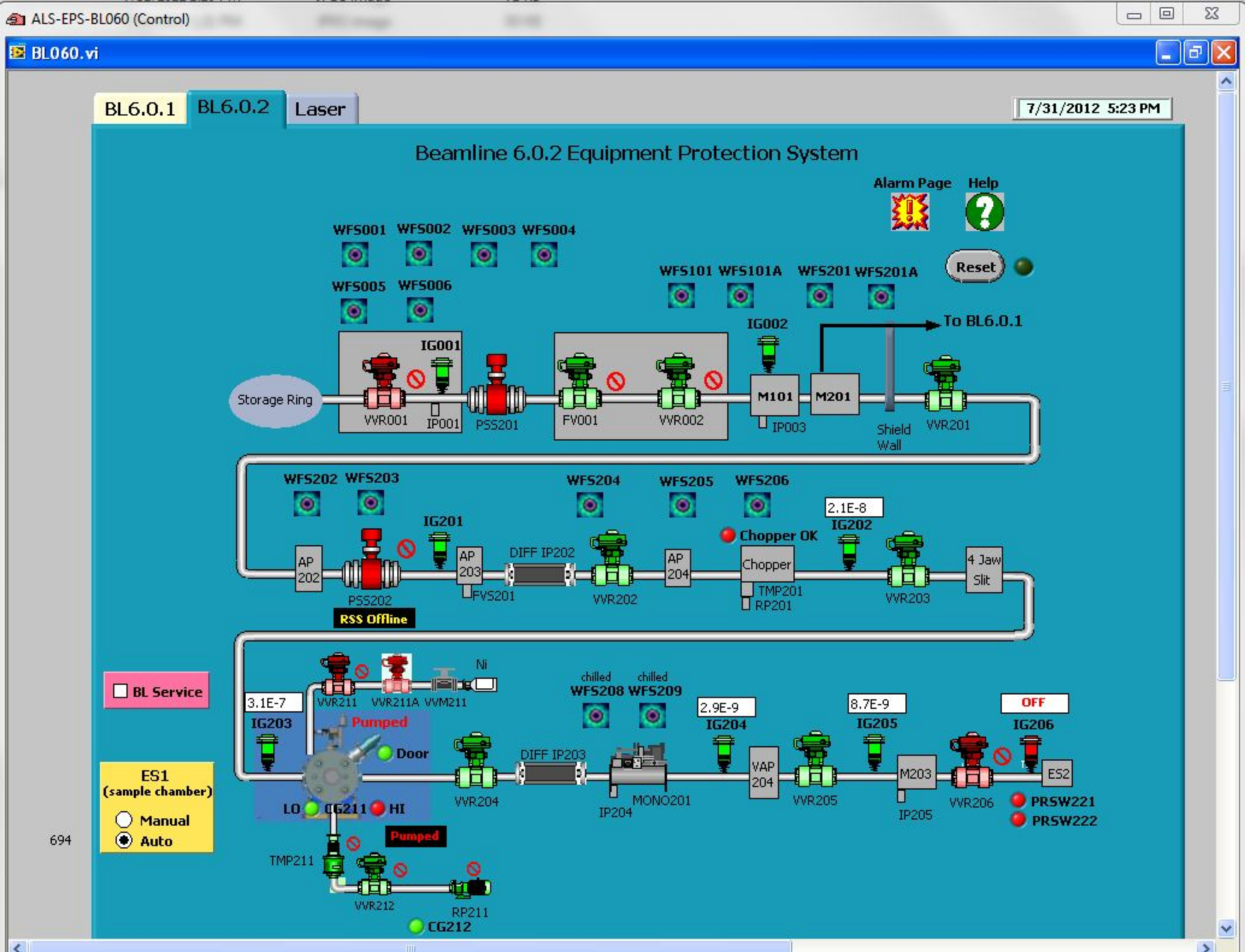
ALS-EPS-BL060 (Control)
BL060.vi
BL6.0.1
BL6.0.2
Laser
7/31/2012 5:23 PM
Beamline 6.0.2 Equipment Protection System
Alarm Page
Help
Reset
WFS001 WFS002 WFS003 WFS004
WFS005 WFS006
WFS101 WFS101A WFS201 WFS201A
IG002
To BL6.0.1
IG001
Storage Ring
VVR001
IP001
PSS201
FV001
VVR002
M101
IP003
M201
Shield Wall
VVR201
WFS202 WFS203
WFS204 WFS205 WFS206
IG201
2.1E-8
IG202
Chopper OK
AP 202
PSS202
RSS Offline
AP 203
FVS201
DIFF IP202
VVR202
AP 204
Chopper
TMP201
RP201
VVR203
4 Jaw Slit
BL Service
Ni
VVR211
VVR211A
VVM211
3.1E-7
IG203
Pumped
Door
chilled WFS208
chilled WFS209
2.9E-9
IG204
8.7E-9
IG205
OFF
IG206
ES1 (sample chamber)
Manual
Auto
LO
CG211
HI
VVR204
DIFF IP203
IP204
MONO201
VAP 204
VVR205
M203
IP205
VVR206
ES2
PRSW221
PRSW222
Pumped
TMP211
VVR212
RP211
CG212
694

ALS-EPS-BL060 (Control)

BL060.vi

BL6.0.1 | BL6.0.2 | Laser

7/31/2012 5:23 PM

Reset

6.0 Laser Area

Online

Offline

kHz beam

LS001

10 Hz beam

LS002

6.0.2 ES1
Laser Enclosure

6.0.1 Hutch

Ext. Ctrl not enabled from hutch.

LS101

6.0.1 Hutch Door

No Ext. Ctrl

Armed

Ext Ctrl Enabled

Normal Operation

Low Power Alignment

Enclosure 1

LS201

6.0.2 ES1
Sample
Chamber

6.0.2 Chamber Door

In normal operation mode.

399

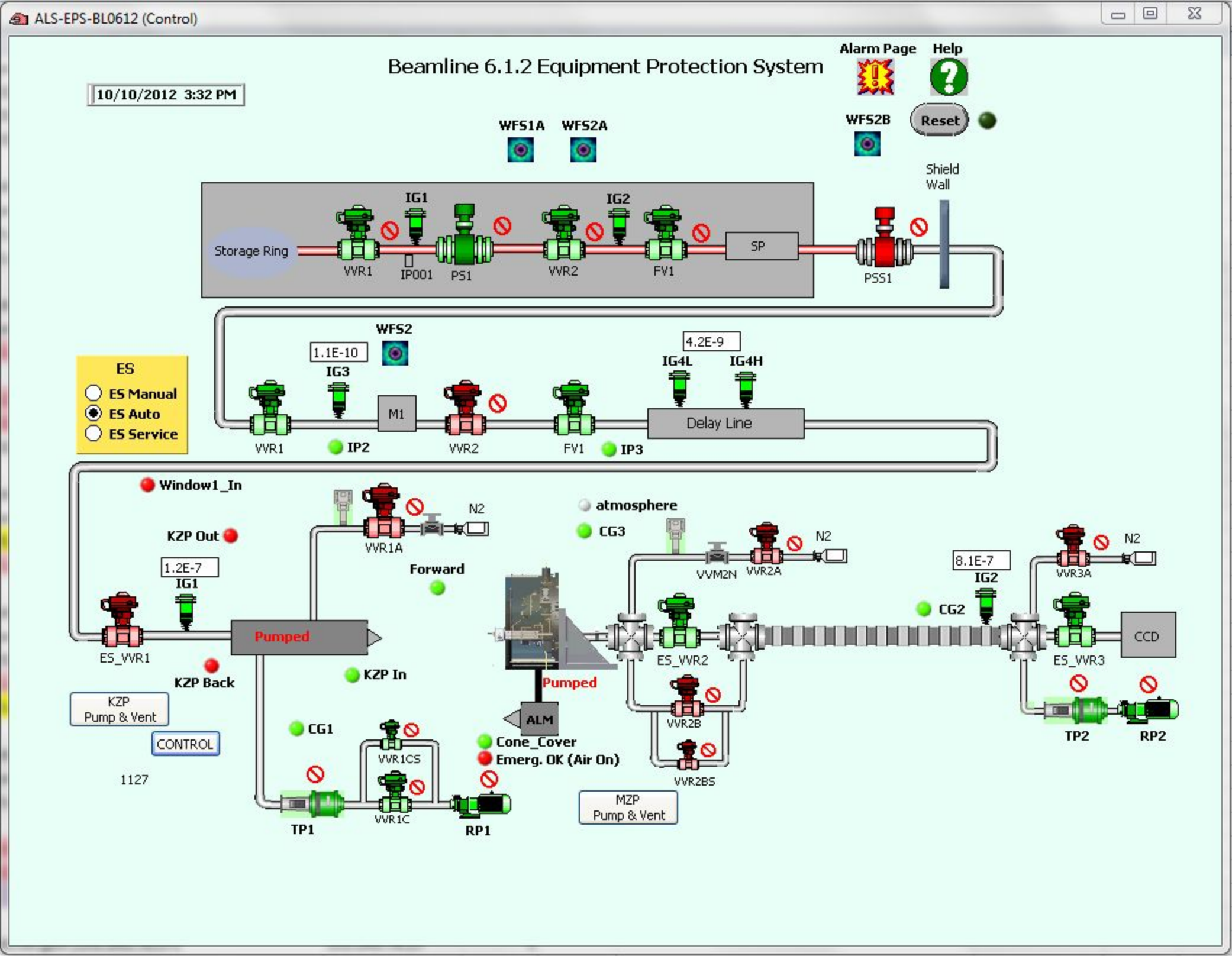
ALS-EPS-BL0612 (Control)
Beamline 6.1.2 Equipment Protection System
Alarm Page
Help
10/10/2012 3:32 PM
Reset
WFS1A
WFS2A
WFS2B
Shield Wall
IG1
IG2
Storage Ring
VVR1
IP001
PS1
VVR2
FV1
SP
PSS1
WFS2
1.1E-10
IG3
4.2E-9
IG4L
IG4H
ES
ES Manual
ES Auto
ES Service
M1
Delay Line
VVR1
IP2
VVR2
FV1
IP3
Window1_In
KZP Out
1.2E-7
IG1
ES_VVR1
KZP Back
KZP Pump & Vent
CONTROL
1127
Pumped
VVR1A
N2
Forward
KZP In
CG1
VVR1CS
VVR1C
TP1
RP1
atmosphere
CG3
Pumped
ALM
Cone_Cover
Emerg. OK (Air On)
VVM2N
VVR2A
N2
ES_VVR2
VVR2B
VVR2BS
MZP Pump & Vent
8.1E-7
IG2
CG2
VVR3A
N2
ES_VVR3
CCD
TP2
RP2

ALS-EPS-BL0631 (Control)

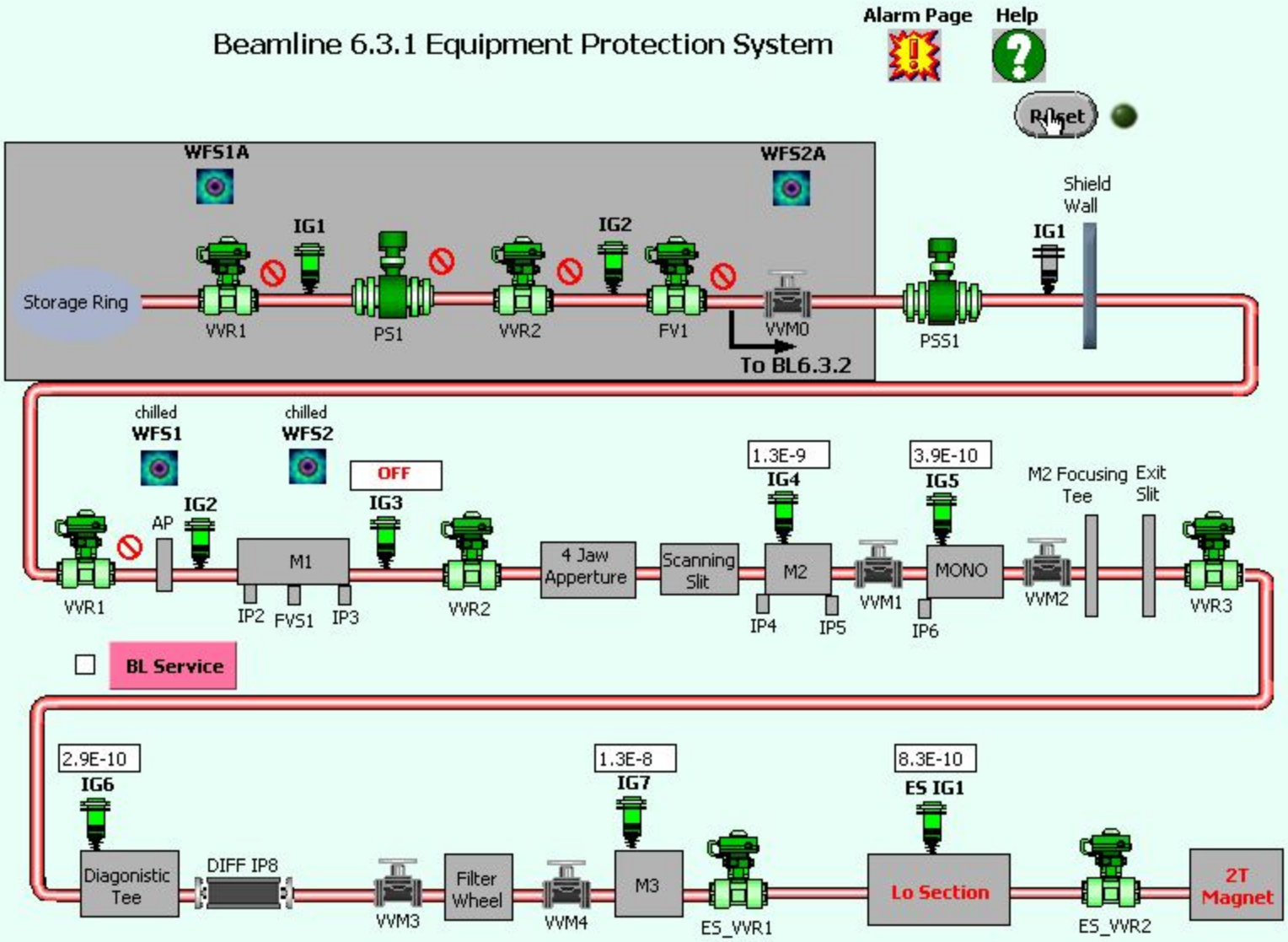

375

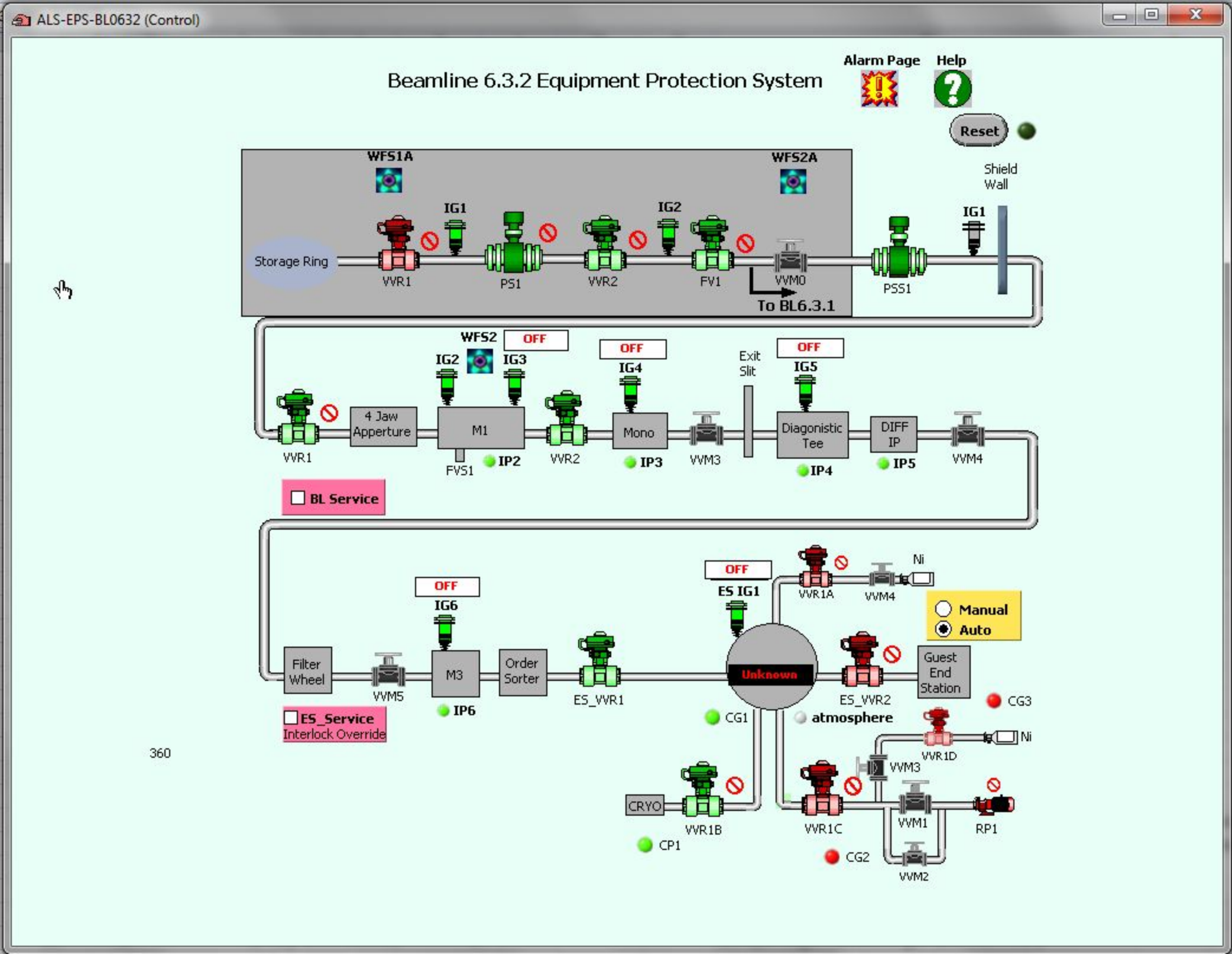
ALS-EPS-BL0632 (Control)
Beamline 6.3.2 Equipment Protection System
Alarm Page
Help
Reset
Shield Wall
WFS1A
WFS2A
IG1
IG2
Storage Ring
VVR1
PS1
VVR2
FV1
VVM0
To BL6.3.1
PSS1
IG1
WFS2
OFF
IG2
IG3
OFF
IG4
Exit Slit
OFF
IG5
VVR1
4 Jaw Apperture
M1
FVS1
IP2
VVR2
Mono
IP3
VVM3
Diagonistic Tee
IP4
DIFF IP
IP5
VVM4
BL Service
OFF
IG6
OFF
ES IG1
VVR1A
VVM4
Ni
Manual
Auto
Filter Wheel
VVM5
M3
IP6
Order Sorter
ES_VVR1
Unknown
ES_VVR2
Guest End Station
CG3
ES_Service
Interlock Override
CG1
atmosphere
VVR1D
Ni
VVM3
CRYO
VVR1B
CP1
VVR1C
VVM1
RP1
CG2
VVM2
360

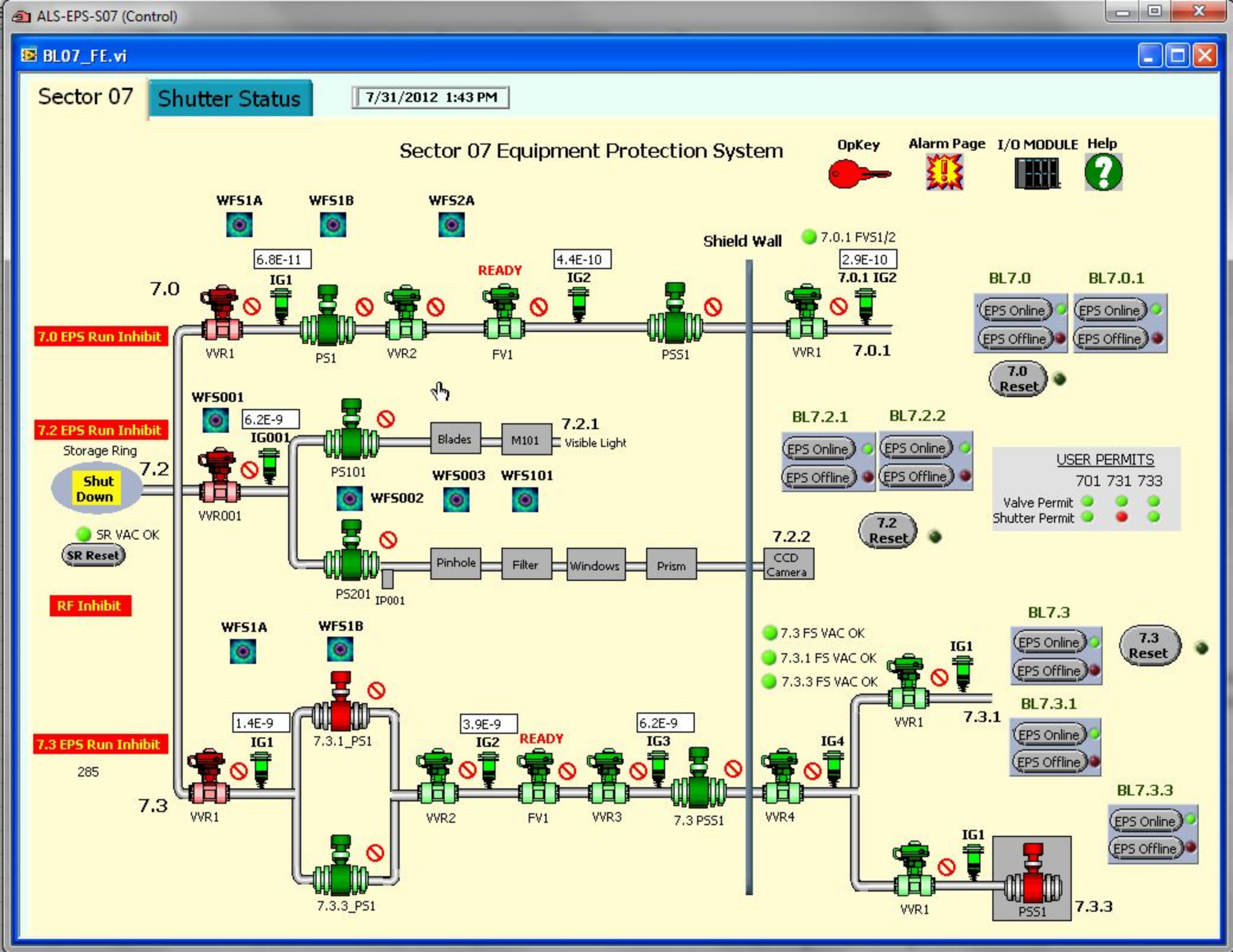
ALS-EPS-S07 (Control)
BL07_FE.vi
Sector 07
Shutter Status
7/31/2012 1:43 PM
Sector 07 Equipment Protection System
OpKey
Alarm Page
I/O MODULE
Help
WFS1A
WFS1B
WFS2A
Shield Wall
7.0.1 FVS1/2
6.8E-11
IG1
READY
4.4E-10
IG2
2.9E-10
7.0.1 IG2
7.0
7.0 EPS Run Inhibit
VVR1
PS1
VVR2
FV1
PSS1
VVR1
7.0.1
BL7.0
BL7.0.1
EPS Online
EPS Offline
7.0 Reset
WFS001
6.2E-9
IG001
7.2 EPS Run Inhibit
Storage Ring
7.2
Shut Down
VVR001
PS101
Blades
M101
7.2.1
Visible Light
WFS003
WFS101
WFS002
BL7.2.1
BL7.2.2
USER PERMITS
701 731 733
Valve Permit
Shutter Permit
7.2 Reset
SR VAC OK
SR Reset
7.2.2
CCD Camera
Pinhole
Filter
Windows
Prism
PS201
IP001
RF Inhibit
WFS1A
WFS1B
7.3 FS VAC OK
7.3.1 FS VAC OK
7.3.3 FS VAC OK
BL7.3
7.3 Reset
IG1
VVR1
7.3.1
BL7.3.1
1.4E-9
IG1
7.3.1_PS1
3.9E-9
IG2
READY
6.2E-9
IG3
IG4
7.3 EPS Run Inhibit
285
7.3
VVR1
VVR2
FV1
VVR3
7.3 PSS1
VVR4
BL7.3.3
7.3.3_PS1
PSS1
7.3.3

ALS-EPS-S07 (Control)

BL07_FE.vi

Sector 07 | Shutter Status | 7/31/2012 1:43 PM

Warning - This display must not be used for any radiation safety-related decisions. For such decisions, look directly at the RSS (personnel safety shutter) chassis indicator lights. Failure to follow this practice could lead to a safety incident!

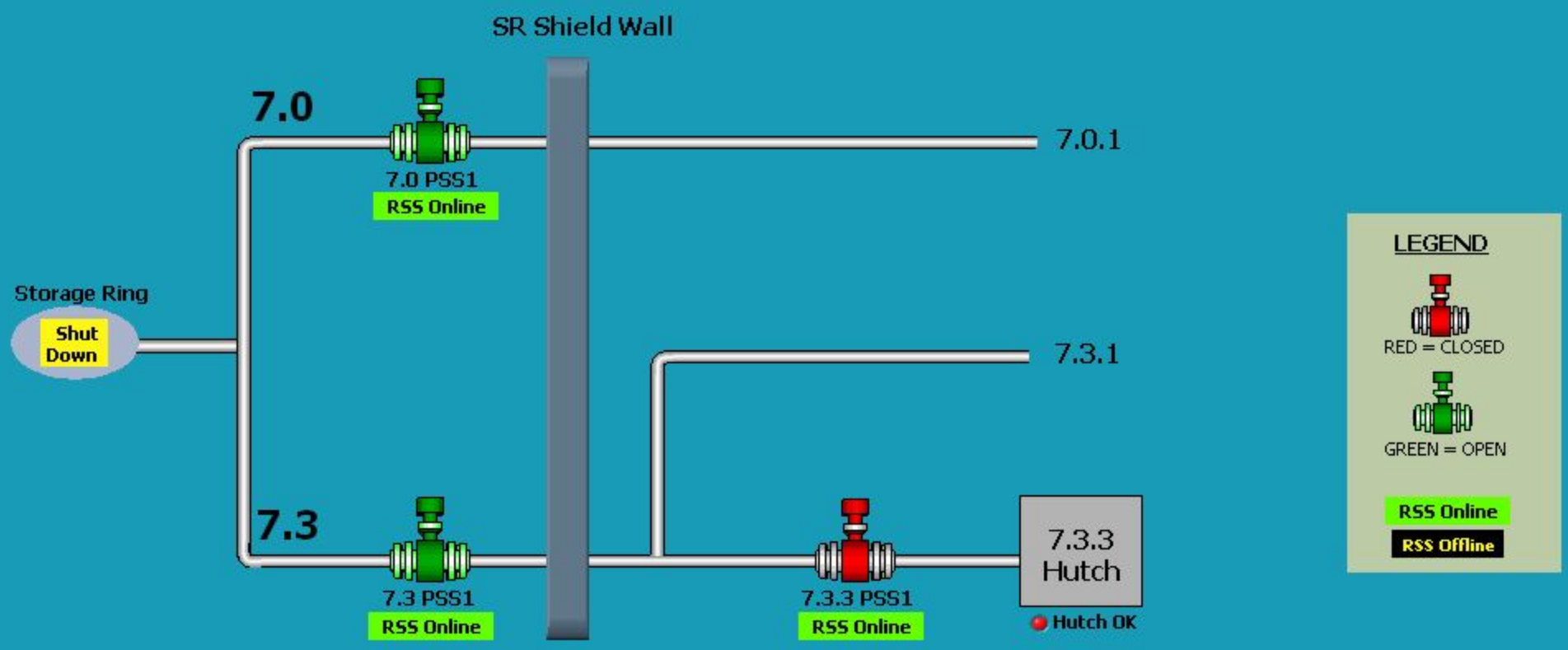

ALS-EPS-BL070 (Control)

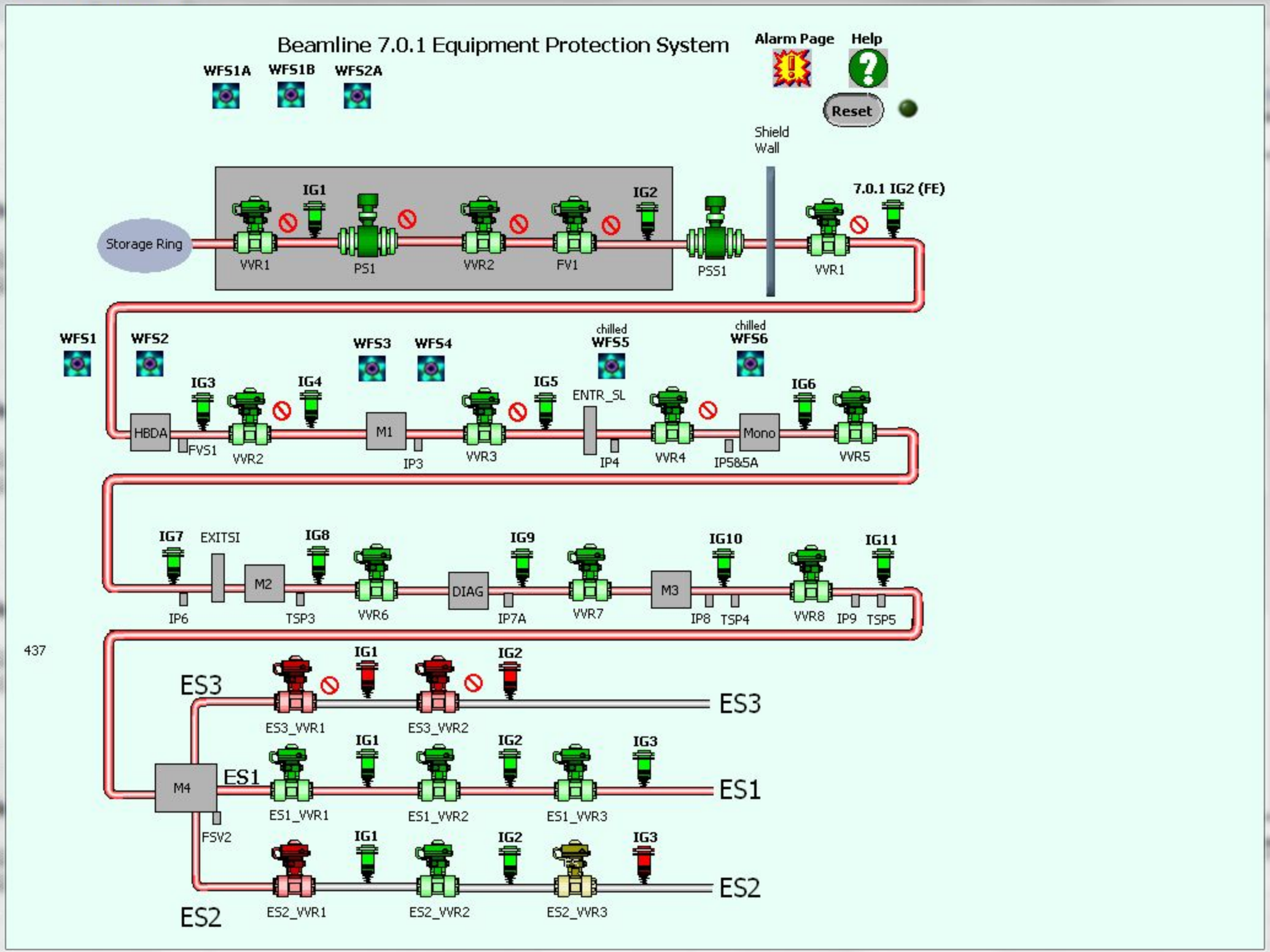

ALS-EPS-BL073 (Control)

Beamline 7.3 Equipment Protection System

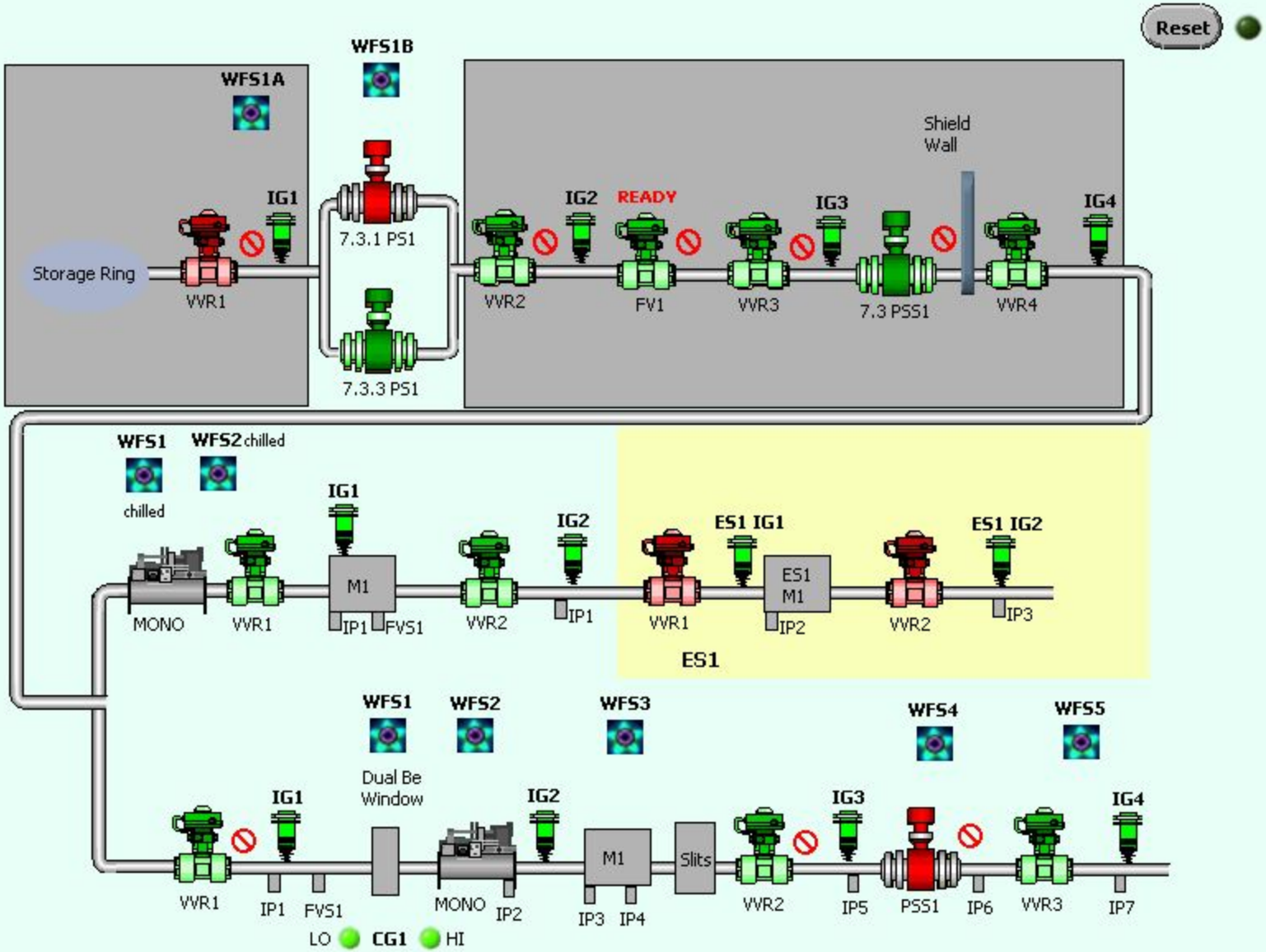

605

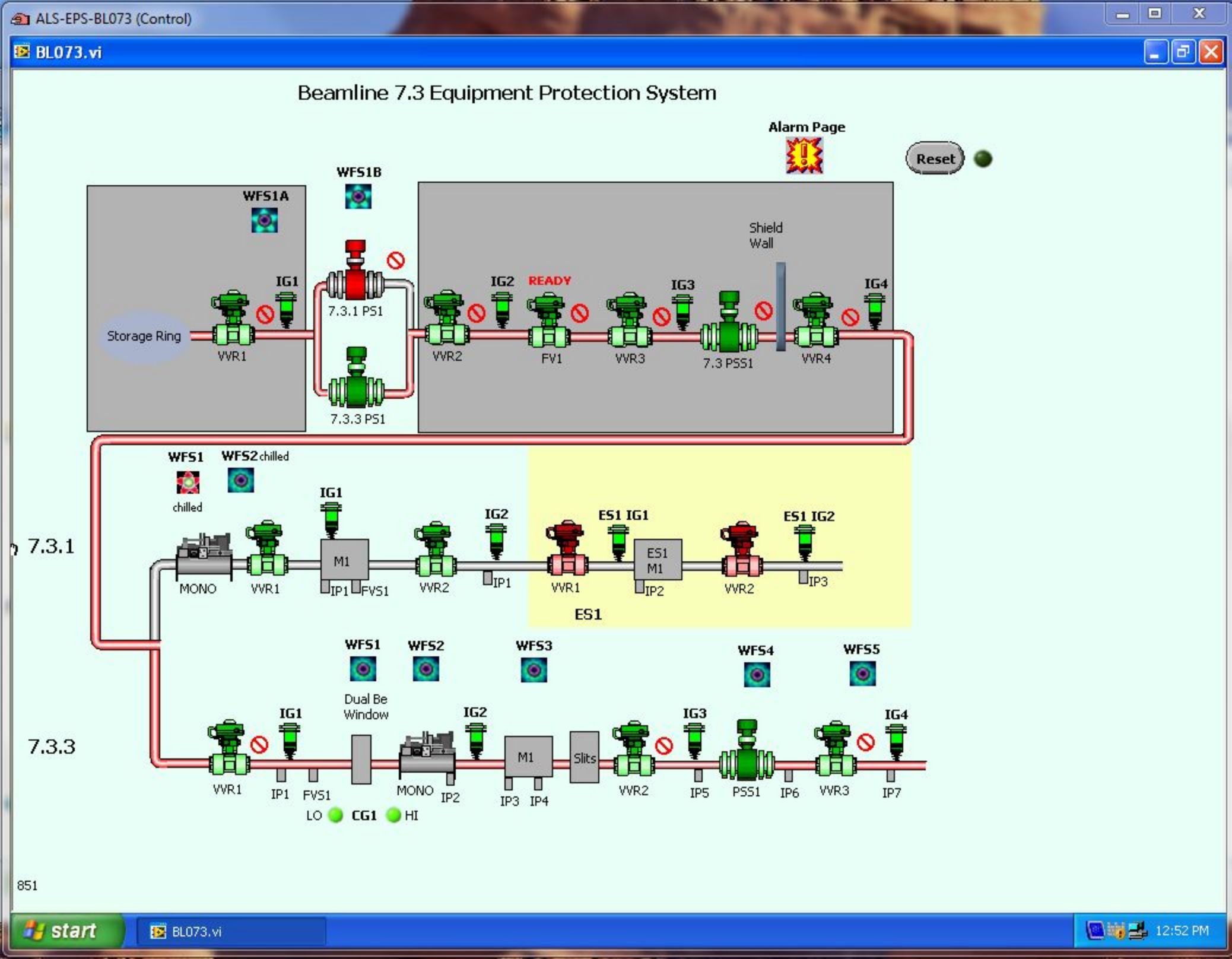
ALS-EPS-BL073 (Control)
BL073.vi
Beamline 7.3 Equipment Protection System
Alarm Page
Reset
WFS1A
WFS1B
Storage Ring
IG1
VVR1
7.3.1 PS1
7.3.3 PS1
IG2
READY
VVR2
FV1
IG3
VVR3
Shield Wall
7.3 PSS1
IG4
VVR4
7.3.1
WFS1
chilled
WFS2 chilled
MONO
VVR1
IG1
M1
IP1
FVS1
VVR2
IG2
IP1
ES1 IG1
VVR1
ES1 M1
IP2
ES1 IG2
VVR2
IP3
ES1
7.3.3
WFS1
Dual Be Window
WFS2
WFS3
WFS4
WFS5
IG1
VVR1
IP1
FVS1
MONO
IP2
IG2
M1
IP3
IP4
Slits
VVR2
IG3
IP5
PSS1
IP6
VVR3
IG4
IP7
LO
CG1
HI
851
start
BL073.vi
12:52 PM

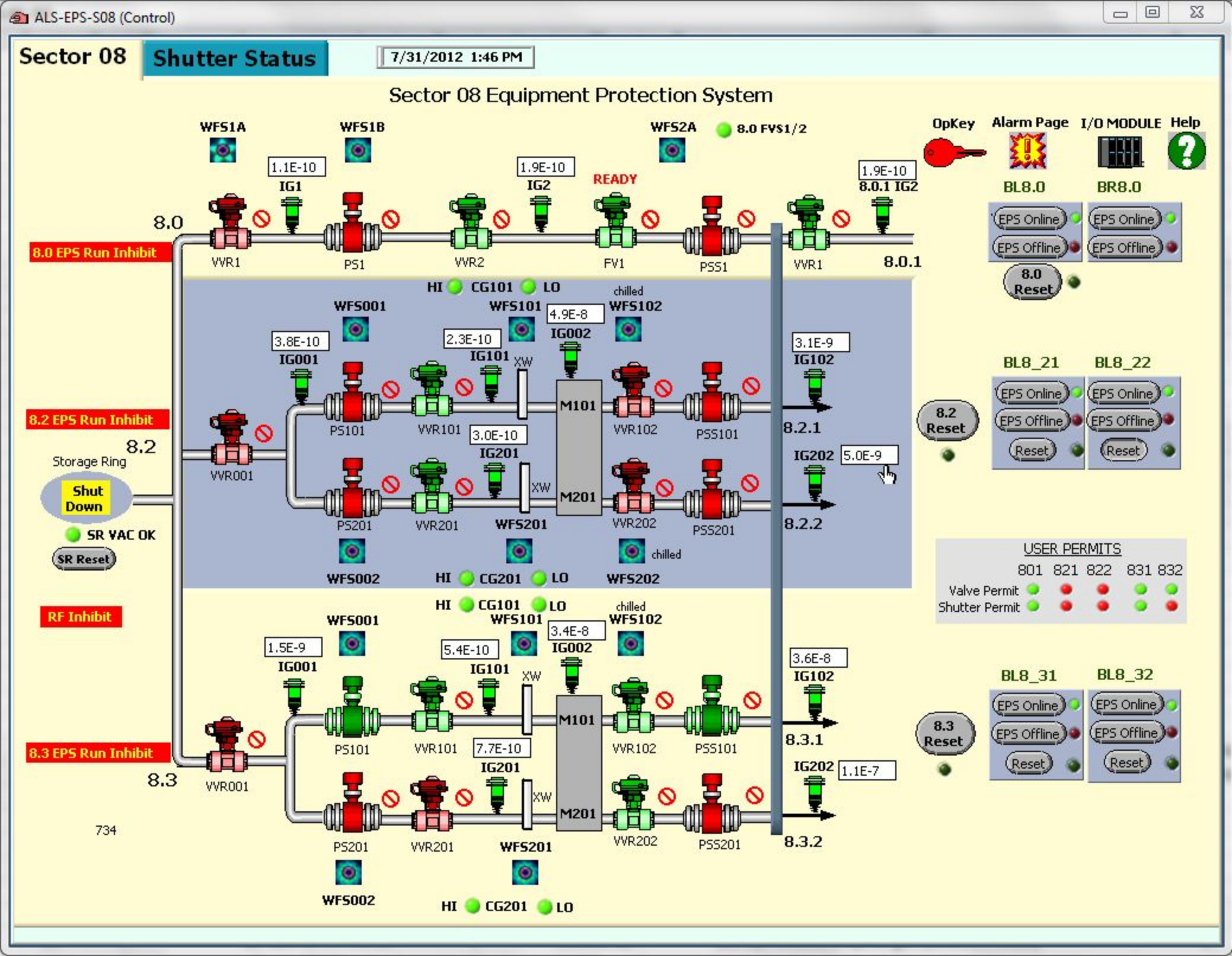
ALS-EPS-S08 (Control)
Sector 08
Shutter Status
7/31/2012 1:46 PM
Sector 08 Equipment Protection System
WFS1A
WFS1B
WFS2A
8.0 FVS1/2
OpKey
Alarm Page
I/O MODULE
Help
1.1E-10
IG1
1.9E-10
IG2
READY
1.9E-10
8.0.1 IG2
BL8.0
BR8.0
8.0
8.0 EPS Run Inhibit
VVR1
PS1
VVR2
FV1
PSS1
VVR1
8.0.1
EPS Online
EPS Offline
8.0 Reset
HI
CG101
LO
chilled
WFS001
WFS101
4.9E-8
WFS102
3.8E-10
IG001
2.3E-10
IG101
XW
IG002
3.1E-9
IG102
BL8_21
BL8_22
8.2 EPS Run Inhibit
8.2
Storage Ring
Shut Down
SR VAC OK
SR Reset
PS101
VVR101
M101
VVR102
PSS101
8.2.1
8.2 Reset
Reset
VVR001
3.0E-10
IG201
IG202
5.0E-9
PS201
VVR201
WFS201
M201
VVR202
PSS201
8.2.2
WFS002
WFS202
USER PERMITS
801 821 822 831 832
Valve Permit
Shutter Permit
RF Inhibit
1.5E-9
IG001
5.4E-10
IG101
3.4E-8
IG002
3.6E-8
IG102
BL8_31
BL8_32
8.3 EPS Run Inhibit
8.3
7.7E-10
IG201
8.3.1
8.3 Reset
IG202
1.1E-7
8.3.2
734

ALS-EPS-S08 (Control)

Sector 08 **Shutter Status** 7/31/2012 1:46 PM

Warning - This display must not be used for any radiation safety-related decisions. For such decisions, look directly at the RSS (personnel safety shutter) chassis indicator lights. Failure to follow this practice could lead to a safety incident!

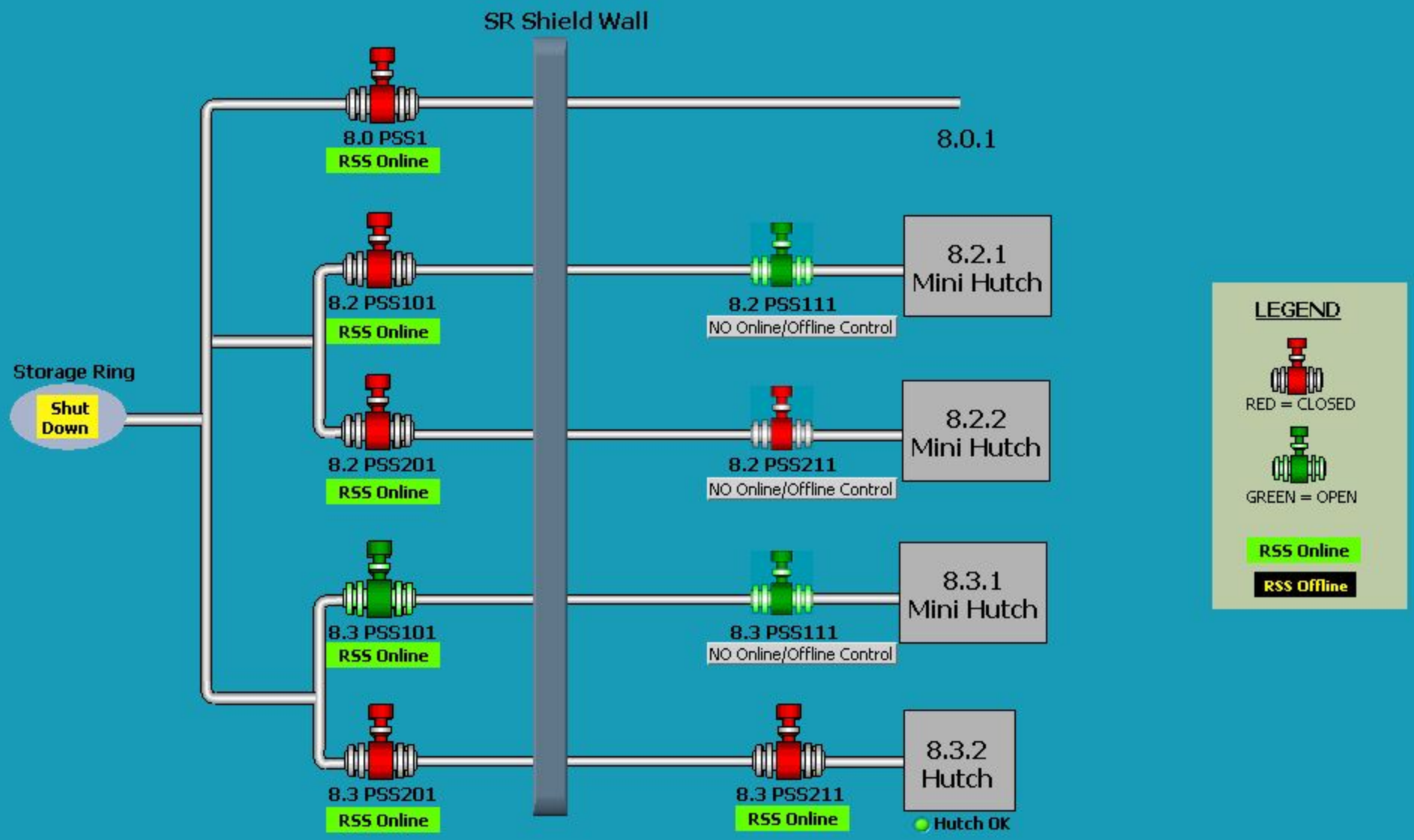

ADMIN-9C50051E2 (Control)

Beamline 8.0.1 Equipment Protection System

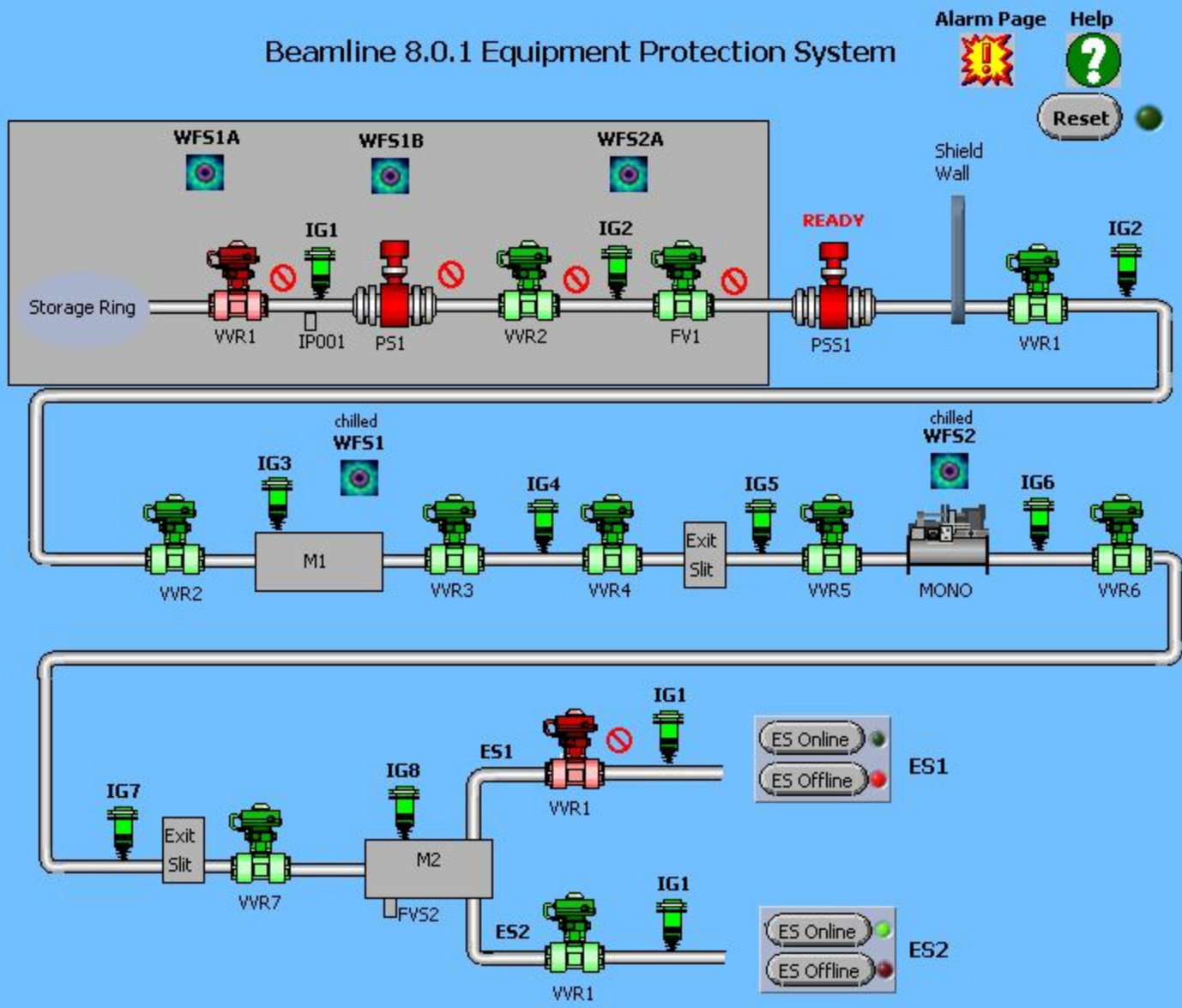

ALS-EPS-BL082 (Control)

Help

BL8.2.1 BL8.2.2

7/31/2012 4:54 PM

Alarm Page

Beamline 8.2.1 Equipment Protection System

Reset Reset Required

Storage Ring
VVR001
IG001
WFS001
PS101
VVR101
LO CG101 HI
IG101
WFS101
IG002
chilled WFS102
M101
VVR102
PSS101
IP102
Shield Wall
8.2.1
IG201
WFS201
PS201
VVR201
LO CG201 HI
WFS202
chilled
WFS002
M201
8.2.2

IG102
IP103
VVR103
WFS103
IG103
AP 201
IP104
2 Crystal MONO 101
TM101
TM102
Cryo Alarm
Cryo Run
HV_Ena
IG103-2
ATM101
chilled WFS104
Diag Tee
BPM 101
VVR104
IG104
M102
IP105
PSS111 indicator only
8.2.1.1
Mini Hutch

response time 400

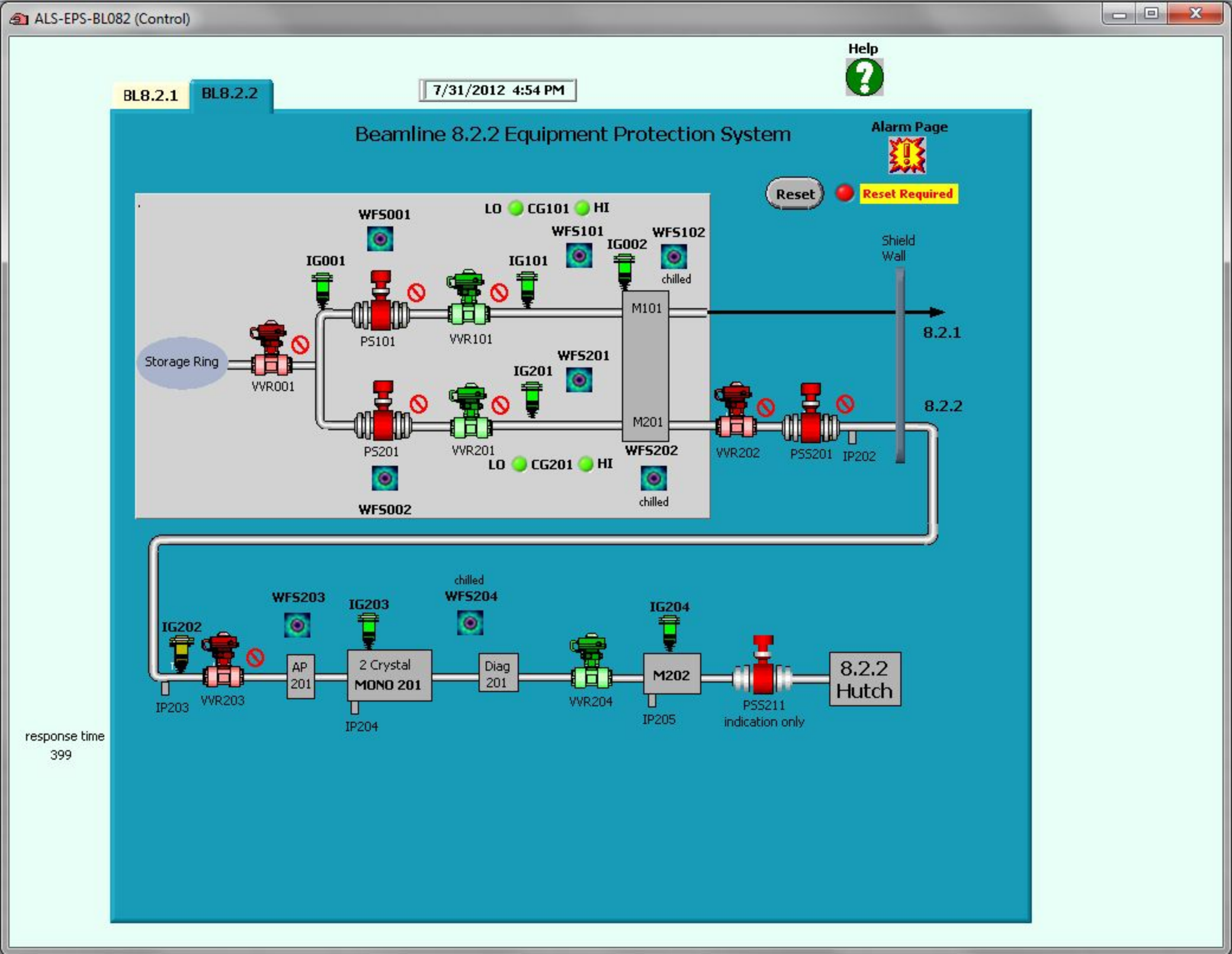
ALS-EPS-BL082 (Control)
Help
BL8.2.1
BL8.2.2
7/31/2012 4:54 PM
Beamline 8.2.2 Equipment Protection System
Alarm Page
Reset
Reset Required
WFS001
LO CG101 HI
WFS101
IG002
WFS102
IG001
IG101
chilled
Shield Wall
M101
8.2.1
Storage Ring
VVR001
PS101
VVR101
WFS201
IG201
8.2.2
M201
PS201
VVR201
WFS202
VVR202
PSS201
IP202
LO CG201 HI
chilled
WFS002
chilled
WFS204
WFS203
IG203
IG204
IG202
AP 201
2 Crystal MONO 201
Diag 201
M202
8.2.2 Hutch
IP203
VVR203
IP204
VVR204
IP205
PSS211
indication only
response time
399

ALS-EPS-SPARE (Control)

BL083.vi

BL8.3.1 BL8.3.2

7/31/2012 5:01 PM

Help

Alarm Page

Beamline 8.3.1 Equipment Protection System

Reset

Shield Wall

Storage Ring

VVR001

IG001

WFS001

PS101

VVR101

IG101

WFS101

IG002

WFS102

LO CG101 HI

M101

VVR102

PSS101

IP102

8.3.1

WFS201

IG201

PS201

VVR201

M201

8.3.2

LO CG201 HI

WFS002

WFS202

IG102

IP103

VVR103

WFS103

AP 201

IG103

2 Crystal MONO 101

IP104

chilled WFS104

Diag Tee

BPM 101

VVR104

IG104

M102

IP105

PSS111

8.3.1

End Station

PRSW111

ALS-EPS-SPARE (Control)

BL083.vi

BL8.3.1 BL8.3.2

7/31/2012 5:02 PM

Help

Alarm Page

Reset

Reset Required

Beamline 8.3.2 Equipment Protection System

Storage Ring

VVR001

IG001

WFS001

PS101

VVR101

IG101

LO CG101 HI

WFS101

IG002

WFS102

M101

WFS201

IG201

PS201

VVR201

LO CG201 HI

M201

WFS002

WFS202

Shield Wall

8.3.1

8.3.2

VVR202

Open

PSS201

Closed

WFS203

chilled WFS204

WFS205

WFS206 WFS207

WFS208

IG202

IG203

IP203

VVR203

Open

AP 201

2 Crystal MONO 201

IP204

IP205

PSS211

Closed

Diag 201

8.3.2 Hutch

CG201

N2 Flow

Hutch OK

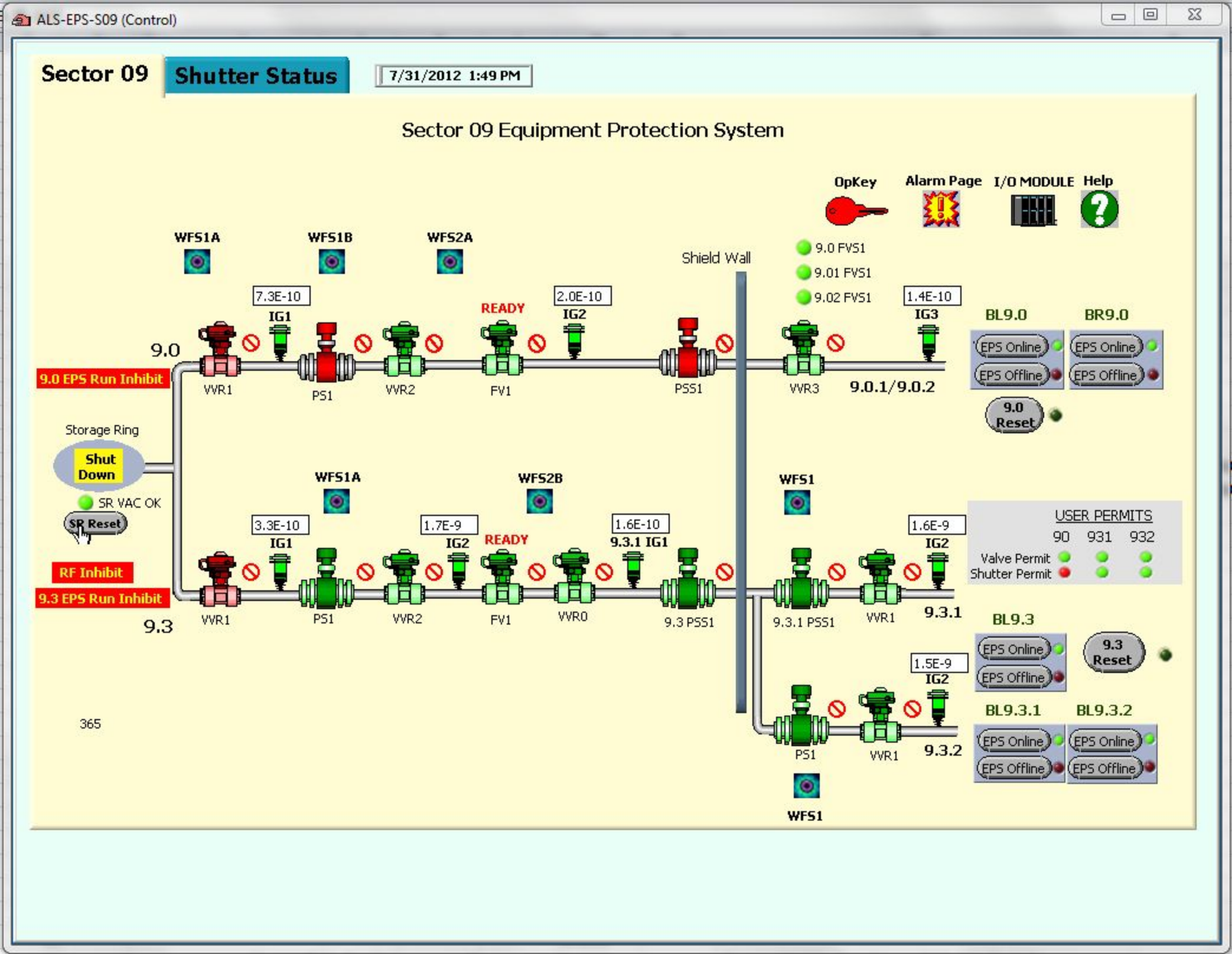
ALS-EPS-S09 (Control)
Sector 09
Shutter Status
7/31/2012 1:49 PM
Sector 09 Equipment Protection System
OpKey
Alarm Page
I/O MODULE
Help
WFS1A
WFS1B
WFS2A
Shield Wall
9.0 FVS1
9.01 FVS1
9.02 FVS1
7.3E-10
IG1
READY
2.0E-10
IG2
1.4E-10
IG3
BL9.0
BR9.0
9.0
9.0 EPS Run Inhibit
VVR1
PS1
VVR2
FV1
PSS1
VVR3
9.0.1/9.0.2
EPS Online
EPS Offline
9.0 Reset
Storage Ring
Shut Down
SR VAC OK
SR Reset
WFS1A
WFS2B
WFS1
3.3E-10
IG1
1.7E-9
IG2
READY
1.6E-10
9.3.1 IG1
1.6E-9
IG2
USER PERMITS
90
931
932
Valve Permit
Shutter Permit
RF Inhibit
9.3 EPS Run Inhibit
9.3
VVR1
PS1
VVR2
FV1
VVR0
9.3 PSS1
9.3.1 PSS1
VVR1
9.3.1
BL9.3
9.3 Reset
1.5E-9
IG2
365
PS1
VVR1
9.3.2
BL9.3.1
BL9.3.2
WFS1

ALS-EPS-S09 (Control)

Sector 09 **Shutter Status** 7/31/2012 1:50 PM

Warning - This display must not be used for any radiation safety-related decisions. For such decisions, look directly at the RSS (personnel safety shutter) chassis indicator lights. Failure to follow this practice could lead to a safety incident!

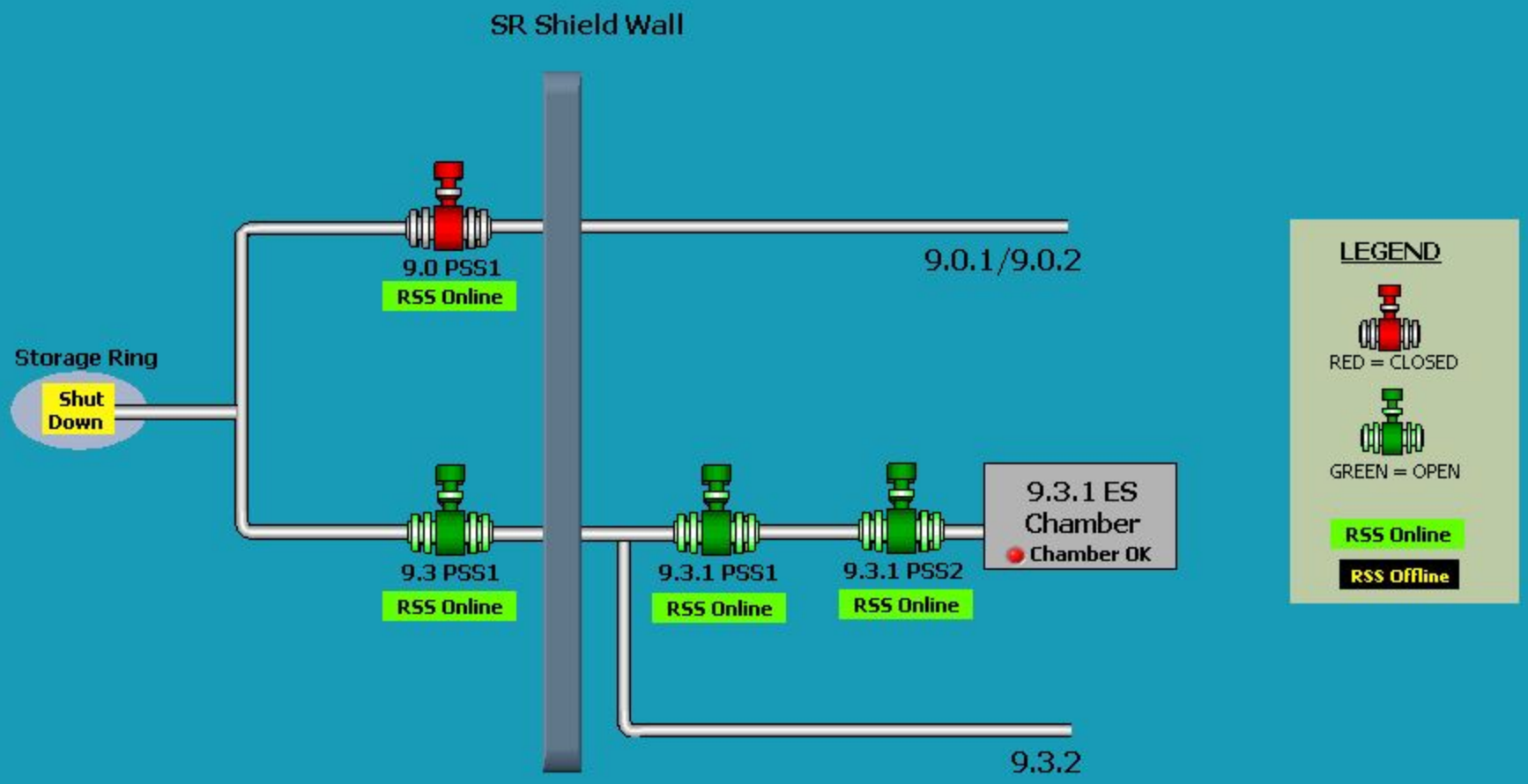

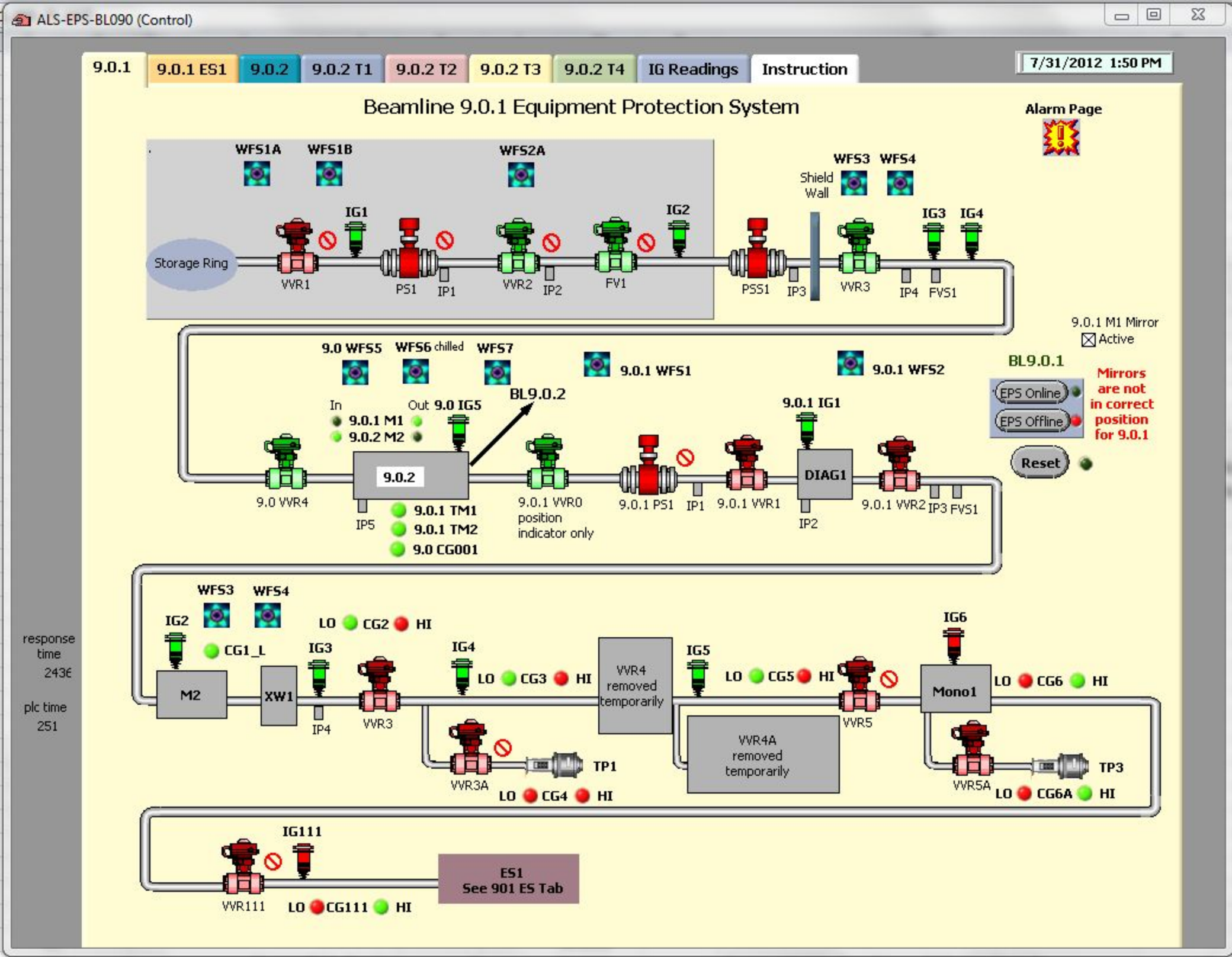
ALS-EPS-BL090 (Control)
9.0.1
9.0.1 ES1
9.0.2
9.0.2 T1
9.0.2 T2
9.0.2 T3
9.0.2 T4
IG Readings
Instruction
7/31/2012 1:50 PM
Beamline 9.0.1 Equipment Protection System
Alarm Page
WFS1A
WFS1B
WFS2A
WFS3
WFS4
Shield Wall
IG1
IG2
IG3
IG4
Storage Ring
VVR1
PS1
IP1
VVR2
IP2
FV1
PSS1
IP3
VVR3
IP4
FVS1
9.0.1 M1 Mirror
Active
9.0 WFS5
WFS6 chilled
WFS7
9.0.1 WFS1
9.0.1 WFS2
BL9.0.1
EPS Online
EPS Offline
Mirrors are not in correct position for 9.0.1
Reset
In
Out
9.0 IG5
BL9.0.2
9.0.1 M1
9.0.2 M2
9.0.1 IG1
9.0 VVR4
9.0.2
IP5
9.0.1 TM1
9.0.1 TM2
9.0 CG001
9.0.1 VVR0
position indicator only
9.0.1 PS1
IP1
9.0.1 VVR1
DIAG1
IP2
9.0.1 VVR2
IP3
FVS1
WFS3
WFS4
IG2
CG1_L
LO
CG2
HI
IG3
IG4
LO
CG3
HI
VVR4 removed temporarily
IG5
LO
CG5
HI
IG6
M2
XW1
IP4
VVR3
VVR3A
TP1
LO
CG4
HI
VVR4A removed temporarily
VVR5
Mono1
LO
CG6
HI
VVR5A
TP3
LO
CG6A
HI
response time
2436
plc time
251
IG111
VVR111
LO
CG111
HI
ES1
See 901 ES Tab

ALS-EPS-BL090 (Control)

9.0.1 | 9.0.1 ES1 | 9.0.2 | 9.0.2 T1 | 9.0.2 T2 | 9.0.2 T3 | 9.0.2 T4 | IG Readings | Instruction

7/31/2012 1:51 PM

BL0901 ES EPS

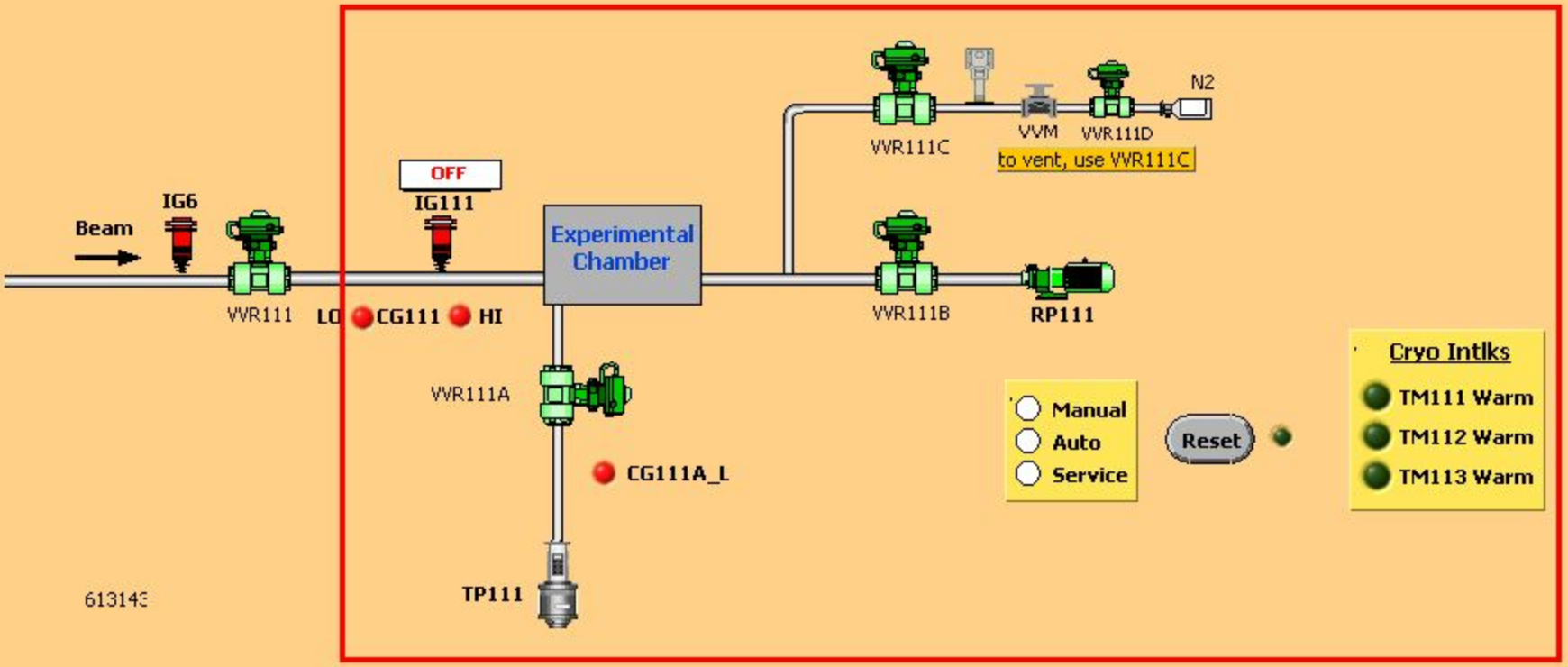

613143

response time
797

plc time
251

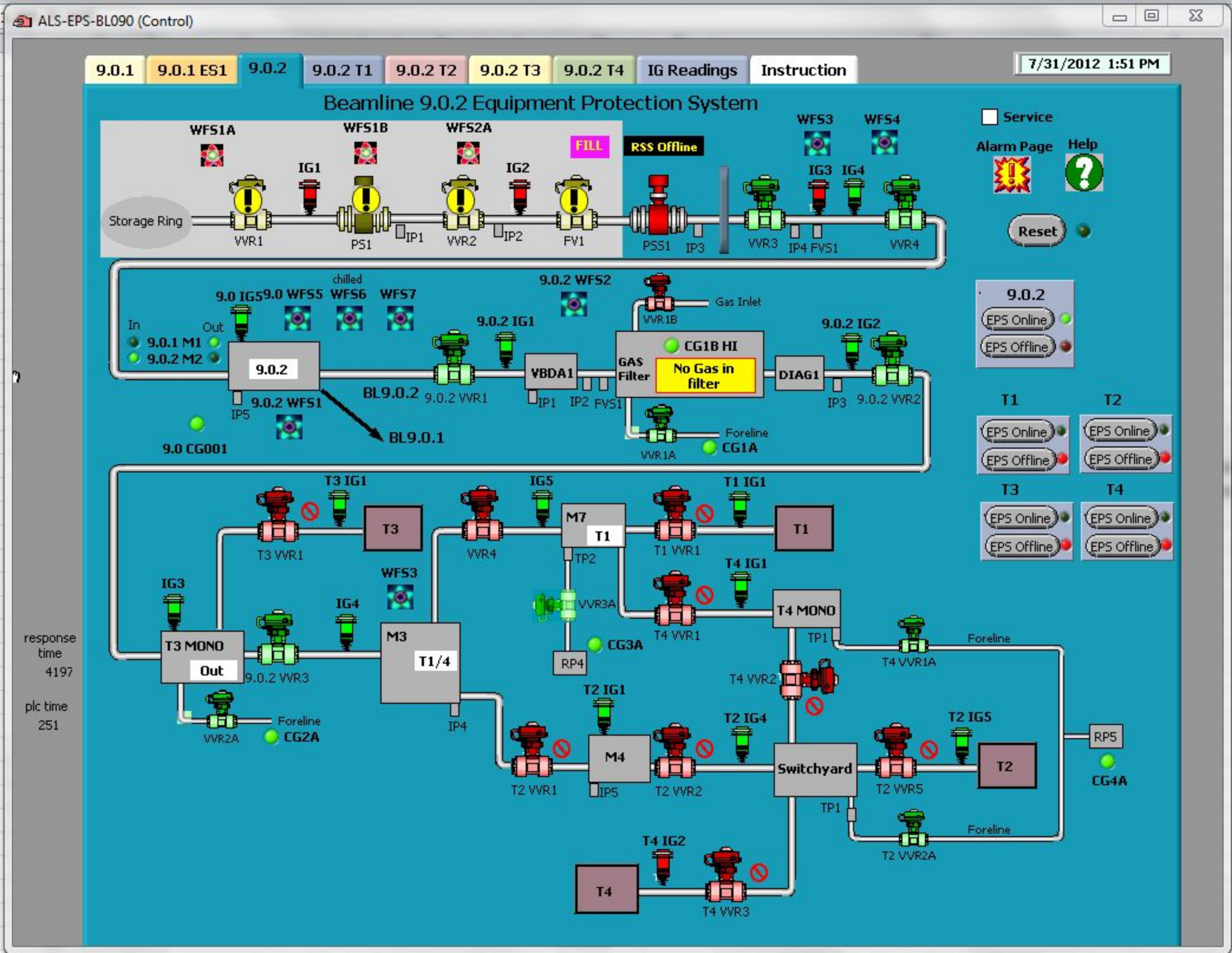
ALS-EPS-BL090 (Control)
9.0.1
9.0.1 ES1
9.0.2
9.0.2 T1
9.0.2 T2
9.0.2 T3
9.0.2 T4
IG Readings
Instruction
7/31/2012 1:51 PM
Beamline 9.0.2 Equipment Protection System
Service
Alarm Page
Help
Reset
Storage Ring
WFS1A
WFS1B
WFS2A
FILL
RSS Offline
WFS3
WFS4
IG1
IG2
IG3
IG4
VVR1
PS1
IP1
VVR2
IP2
FV1
PSS1
IP3
VVR3
IP4
FVS1
VVR4
9.0 IG5
9.0 WFS5
chilled
WFS6
WFS7
9.0.2 WFS2
Gas Inlet
VVR1B
9.0.2 IG1
9.0.2 IG2
In
Out
9.0.1 M1
9.0.2 M2
9.0.2
IP5
9.0.2 WFS1
BL9.0.2
9.0.2 VVR1
VBDA1
IP1
IP2
FVS1
GAS Filter
CG1B HI
No Gas in filter
DIAG1
IP3
9.0.2 VVR2
9.0 CG001
BL9.0.1
VVR1A
Foreline
CG1A
9.0.2
EPS Online
EPS Offline
T1
T2
T3
T4
T3 IG1
T3
T3 VVR1
IG5
M7
T1
TP2
T1 IG1
T1 VVR1
T4 IG1
T4 MONO
TP1
T4 VVR1
T4 VVR1A
Foreline
IG3
IG4
WFS3
T3 MONO
Out
9.0.2 VVR3
M3
T1/4
IP4
VVR3A
RP4
CG3A
T4 VVR2
VVR2A
Foreline
CG2A
T2 IG1
T2 IG4
T2 IG5
M4
IP5
T2 VVR1
T2 VVR2
Switchyard
TP1
T2 VVR5
T2
RP5
CG4A
T2 VVR2A
Foreline
T4 IG2
T4
T4 VVR3
response time
4197
plc time
251

ALS-EPS-BL090 (Control)

9.0.1 | 9.0.1 ES1 | 9.0.2 | 9.0.2 T1 | 9.0.2 T2 | 9.0.2 T3 | 9.0.2 T4 | IG Readings | Instruction

7/31/2012 1:53 PM

902 IG1 VBDA	OFF	9022 IG1 M4	OFF
902 IG2 DIAG1	OFF	9022 IG4 Diff	OFF
902 IG3 T3 MONO	OFF	9022 IG5 T2 Main Chamber	OFF
902 IG4 M3	OFF	9024 IG1 T4 MONO	OFF
902 IG5 M7	OFF	9024 IG2 T4	OFF
9021 IG1 T1	OFF	902 CG1B	0E+0
9023 IG1 T3	OFF		

response time 920

plc time 251

ALS-EPS-BL090 (Control)

9.0.1 | 9.0.1 ES1 | 9.0.2 | 9.0.2 T1 | 9.0.2 T2 | 9.0.2 T3 | 9.0.2 T4 | IG Readings | Instruction

7/31/2012 1:52 PM

TERMINAL 1

No Beam toT1.

T1 Online

T1 Offline

No Gas in filter

T1 VVR1	BEAM	902 VVR1B Gas Inlet
Open VVR1 — Open	Beam On — On	Open VVR1B — Open
Close VVR1 — Closed	Beam Off — Off	Close VVR1B — Closed

response time 775

plc time 251

ALS-EPS-BL090 (Control)

9.0.1 | 9.0.1 ES1 | 9.0.2 | 9.0.2 T1 | 9.0.2 T2 | 9.0.2 T3 | 9.0.2 T4 | IG Readings | Instruction

7/31/2012 1:52 PM

TERMINAL 2

No Beam toT2.

T2 Online

T2 Offline

No Gas in filter

T2 VVR5	BEAM	902 VVR1B Gas Inlet
Open VVR5 — Open	Beam On — On	Open VVR1B — Open
Close VVR5 — Closed	Beam Off — Off	Close VVR1B — Closed

M3 is not in T2

response time 641

plc time 250

ALS-EPS-BL090 (Control)

9.0.1 | 9.0.1 ES1 | 9.0.2 | 9.0.2 T1 | 9.0.2 T2 | 9.0.2 T3 | 9.0.2 T4 | IG Readings | Instruction

7/31/2012 1:52 PM

TERMINAL 3

No Beam toT3.

T3 Online

T3 Offline

No Gas in filter

T3 VVR1		BEAM		902 VVR1B Gas Inlet	
Open VVR1	Open	Beam On	On	Open VVR1B	Open
Close VVR1	Closed	Beam Off	Off	Close VVR1B	Closed

Mono is out

response time 639

plc time 251

ALS-EPS-BL090 (Control)

9.0.1 | 9.0.1 ES1 | 9.0.2 | 9.0.2 T1 | 9.0.2 T2 | 9.0.2 T3 | 9.0.2 T4 | IG Readings | Instruction

7/31/2012 1:53 PM

TERMINAL 4

No Beam toT4.

T4 Online

T4 Offline

T4 VVR3	BEAM	902 VVR1B Gas Inlet (No Gas in filter)
Open VVR3 — Open	Beam On — On	Open VVR1B — Open
Close VVR3 — Closed	Beam Off — Off	Close VVR1B — Closed

M7 is not in T4

response time 642

plc time 251

ALS-EPS-BL090 (Control)

9.0.1 | 9.0.1 ES1 | 9.0.2 | 9.0.2 T1 | 9.0.2 T2 | 9.0.2 T3 | 9.0.2 T4 | IG Readings | Instruction

7/31/2012 1:54 PM

Help for EPS (EQUIPMENT PROTECTION SYSTEM)

The beamline has a PC running Labview as the interface to the EPS.

1) Trouble shooting EPS display -- If power is lost, reboot and log in as "EPS" with "EPSuser" as the password if needed. User display PC at terminals are Corba clients of the front-end computer in BL0904. If the user display PC hangs or is not working properly, try
a) restart the display PC, if this doesn't work,
b) have beamline coordinator restart FE display PC, then restart user display PC.

2) Beamline operation:
a) Open or close any valve or shutter by clicking on it. A menu will pop up. Green device is "open," red device is "closed".
b) The universal "not" symbol ⃠ next to a device means the state of that device is not changeable. Click on the "not" symbol for a description of why the device state cannot be changed.
c) Beam pipe colors: Red means beam in pipe; gray means no beam; Final valves at each terminal are window valves and allow visible light through when closed. In this case, the beam pipe is yellow.

3) Device faults and resets:
a) Faulted ion gauges (IG) go red. When IG becomes "ok," IG symbol blinks yellow indicating a need for a reset.
b) Faulted water flow switches (WFS) stop spinning. When the flow is "ok," the symbol starts spinning, but the orange box around flow indicates a need for reset.
c) Valve or shutter fault is indicated by a yellow circle with exclamation point. Faults are either:
i) open/closed sensors shorted or
ii) device failed to respond within a set time period.
d) Reset Buttons
i) When any device needs a reset, the reset light beside the appropriate reset button flashes. Clicking on that RESET button will reset the faults.
e) The alarm page records the fault and reset activity with a timestamp.

4) Service mode is for beamline scientists use only. However, it does not override any critical interlocks. Service mode will
a) prevent the shutter and valves from closing during mirror movement (T3 mono, M3, M7);
b) allow closure of 9.0.2_VVR2 & 3 without closing shutter;
c) allow opening of terminal first valves when the terminals are offline (no override of IG interlocks, however);
d) Allow any user EPS displays to control the gas filter or shutter even when that terminal is not online.

5) Mirror movements
a) 9.0.1_M1 or 9.0.2_M2 mirror movement will put the currently operating branchline offline and close its first valve and the main shutter.
b) T3 mono, M3 & M7 will not put terminals offline when moved but will close the shutter and the first valve of the currently operating terminal. That valve and the main shutter will then be openable.
c) T3 Mono movement to the T3 position closes VVR3 and gives a pop-up menu before allowing VVR3 to open.

6) Miscellaneous
a) 9.0.2 VVR1, 2 & 3 are the only valves that must have the shutter closed to protect them before they can close.
b) Terminal indicator boxes will have green background when online and gray when offline.

response time
783

plc time
251

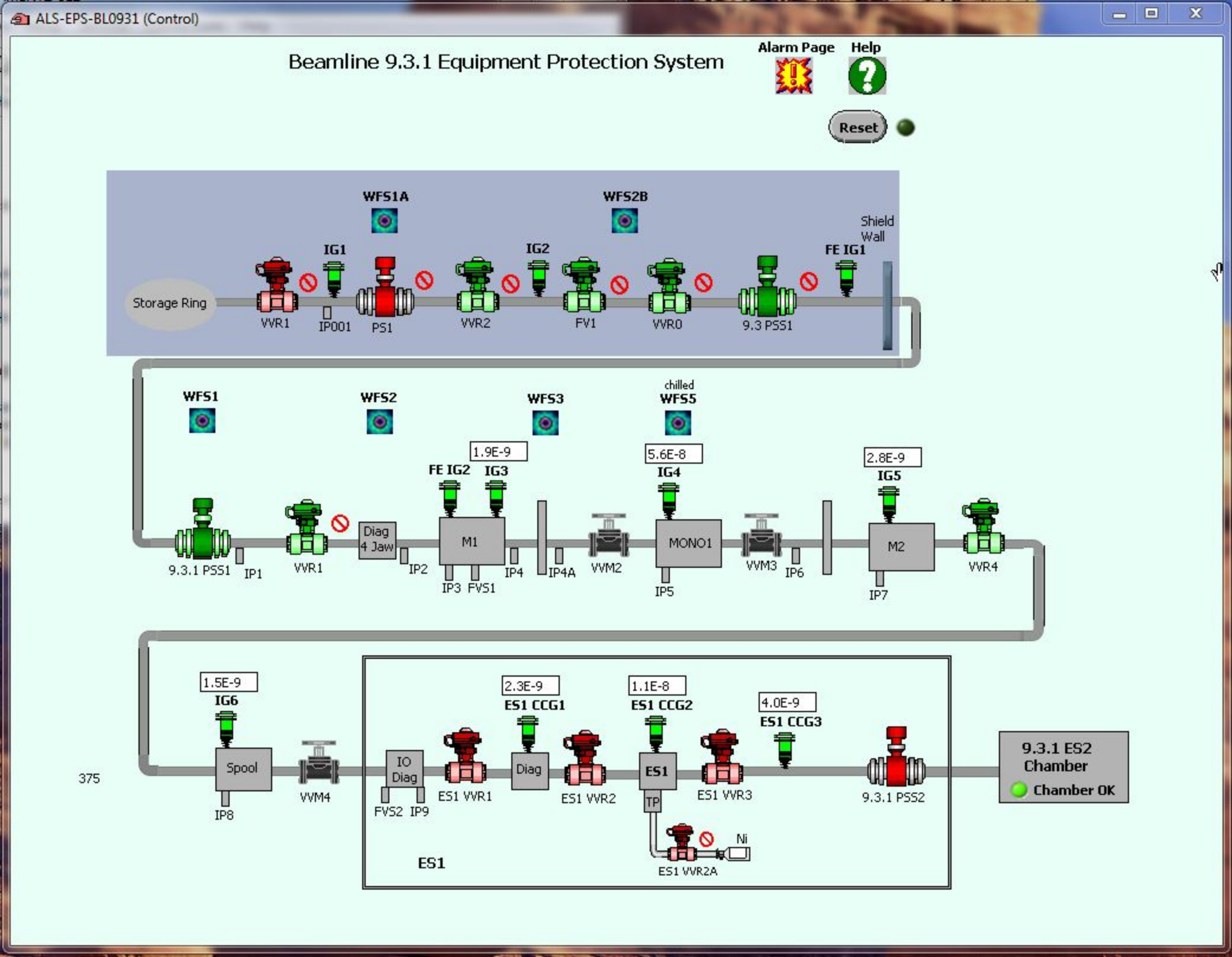
ALS-EPS-BL0931 (Control)
Beamline 9.3.1 Equipment Protection System
Alarm Page
Help
Reset
WFS1A
WFS2B
Shield Wall
IG1
IG2
FE IG1
Storage Ring
VVR1
IP001
PS1
VVR2
FV1
VVR0
9.3 PSS1
WFS1
WFS2
WFS3
chilled
WFS5
1.9E-9
5.6E-8
2.8E-9
FE IG2
IG3
IG4
IG5
9.3.1 PSS1
IP1
VVR1
Diag 4 Jaw
IP2
M1
IP3
FVS1
IP4
IP4A
VVM2
MONO1
IP5
VVM3
IP6
M2
IP7
VVR4
1.5E-9
2.3E-9
1.1E-8
4.0E-9
IG6
ES1 CCG1
ES1 CCG2
ES1 CCG3
375
Spool
IP8
VVM4
IO Diag
FVS2
IP9
ES1 VVR1
Diag
ES1 VVR2
ES1
TP
ES1 VVR3
9.3.1 PSS2
9.3.1 ES2 Chamber
Chamber OK
Ni
ES1 VVR2A
ES1

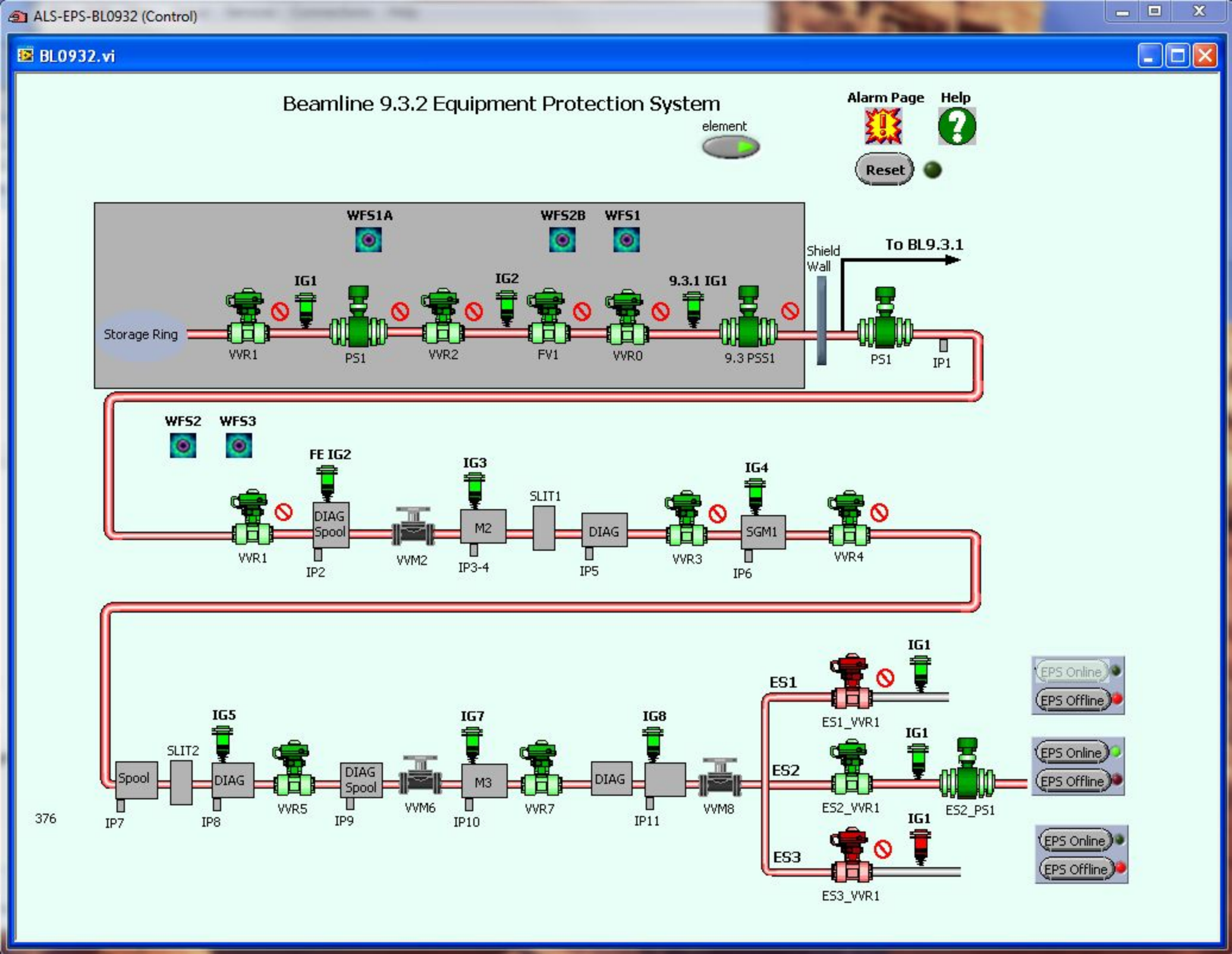
ALS-EPS-BL0932 (Control)
BL0932.vi
Beamline 9.3.2 Equipment Protection System
element
Alarm Page
Help
Reset
WFS1A
WFS2B
WFS1
IG1
IG2
9.3.1 IG1
Storage Ring
VVR1
PS1
VVR2
FV1
VVR0
9.3 PSS1
Shield Wall
To BL9.3.1
PS1
IP1
WFS2
WFS3
FE IG2
IG3
IG4
SLIT1
VVR1
DIAG Spool
IP2
VVM2
M2
IP3-4
DIAG
IP5
VVR3
SGM1
IP6
VVR4
IG1
ES1
ES1_VVR1
EPS Online
EPS Offline
IG5
IG7
IG8
SLIT2
Spool
IP7
DIAG
IP8
VVR5
DIAG Spool
IP9
VVM6
M3
IP10
VVR7
DIAG
IP11
VVM8
IG1
ES2
ES2_VVR1
ES2_PS1
EPS Online
EPS Offline
IG1
ES3
ES3_VVR1
EPS Online
EPS Offline
376

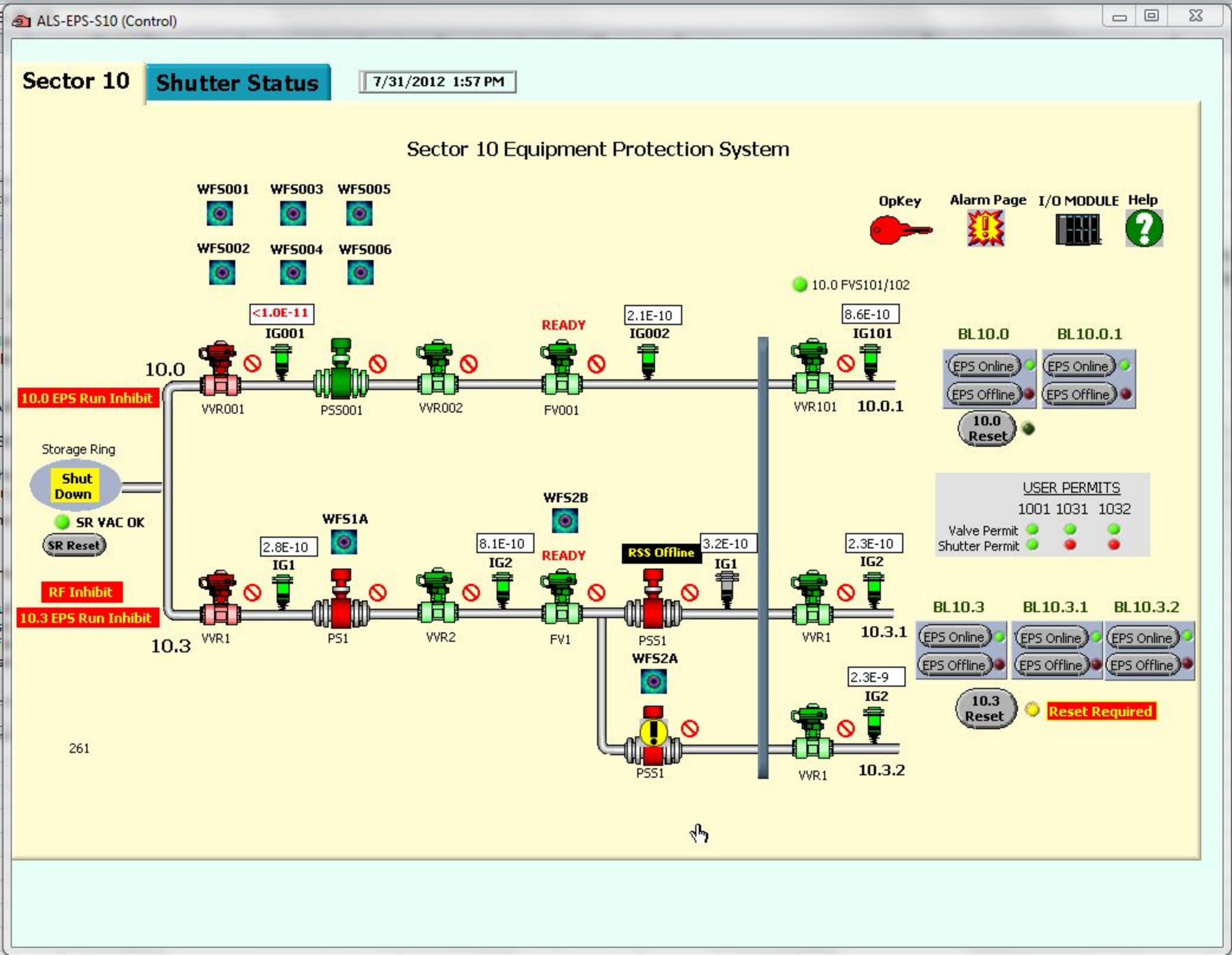
ALS-EPS-S10 (Control)
Sector 10
Shutter Status
7/31/2012 1:57 PM
Sector 10 Equipment Protection System
WFS001
WFS003
WFS005
WFS002
WFS004
WFS006
OpKey
Alarm Page
I/O MODULE
Help
10.0 FVS101/102
<1.0E-11
IG001
READY
2.1E-10
IG002
8.6E-10
IG101
BL10.0
BL10.0.1
10.0
10.0 EPS Run Inhibit
VVR001
PSS001
VVR002
FV001
VVR101
10.0.1
EPS Online
EPS Offline
10.0 Reset
Storage Ring
Shut Down
SR VAC OK
SR Reset
USER PERMITS
1001 1031 1032
Valve Permit
Shutter Permit
WFS2B
WFS1A
2.8E-10
IG1
8.1E-10
IG2
READY
RSS Offline
3.2E-10
IG1
2.3E-10
IG2
RF Inhibit
10.3 EPS Run Inhibit
10.3
VVR1
PS1
VVR2
FV1
PSS1
VVR1
10.3.1
BL10.3
BL10.3.1
BL10.3.2
WFS2A
2.3E-9
IG2
10.3 Reset
Reset Required
PSS1
VVR1
10.3.2
261

ALS-EPS-S10 (Control)

Sector 10 **Shutter Status** 7/31/2012 1:57 PM

<u>Warning</u> - This display must not be used for any radiation safety-related decisions. For such decisions, look directly at the RSS (personnel safety shutter) chassis indicator lights. Failure to follow this practice could lead to a safety incident!

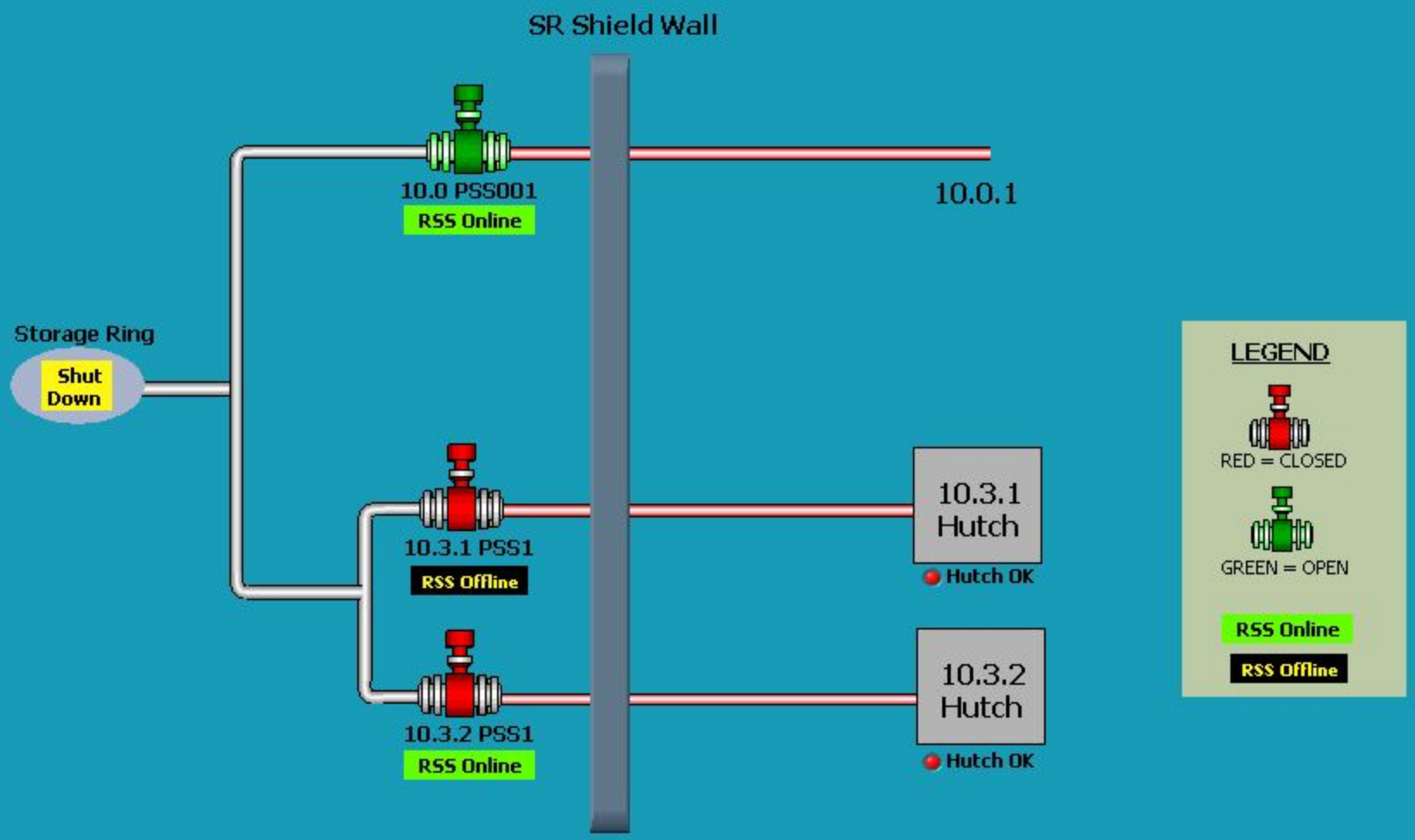

ALS-EPS-BL100 (Control)

BL1001 **ES1**

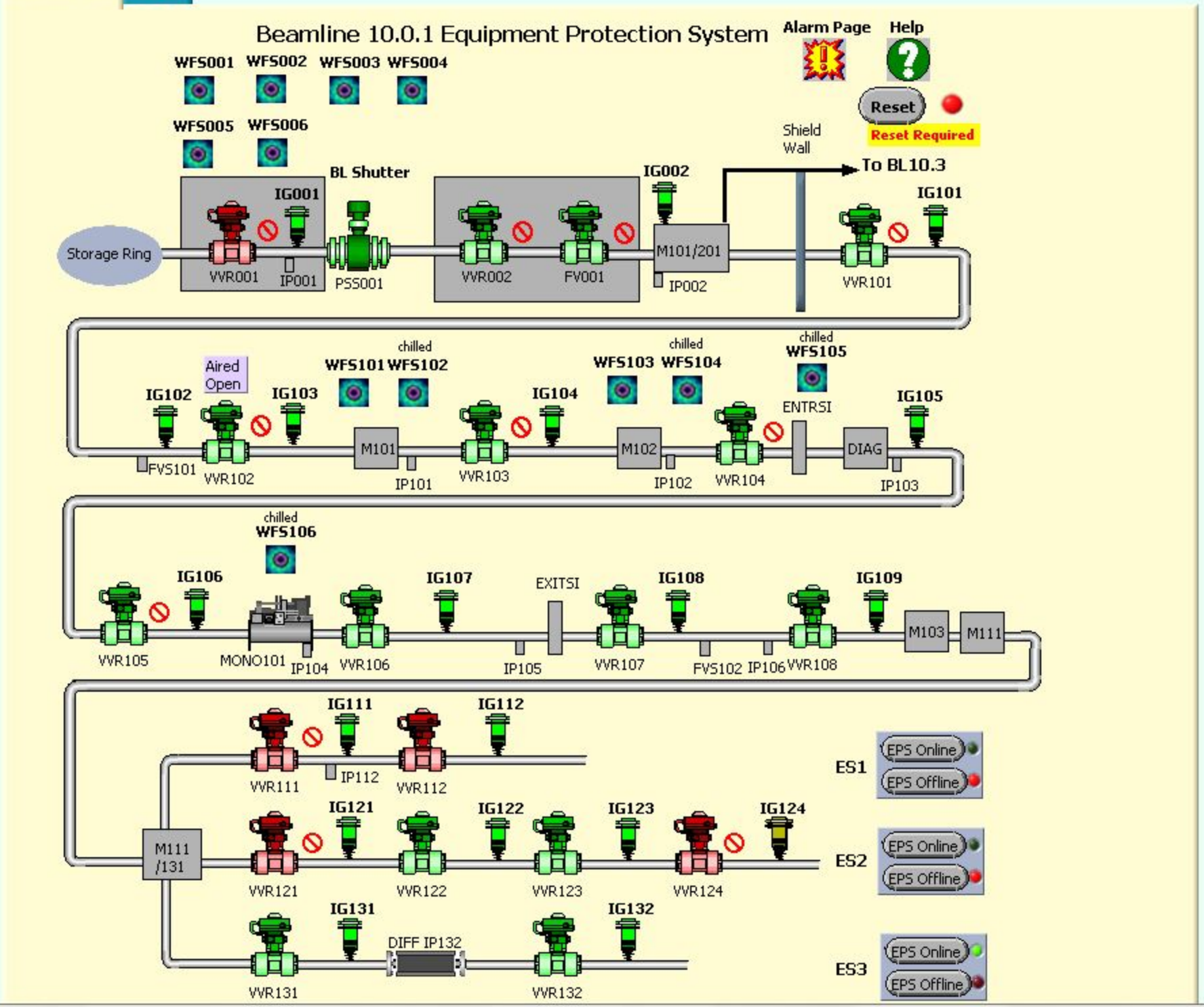

ALS-EPS-BL100 (Control)

BL1001 ES1

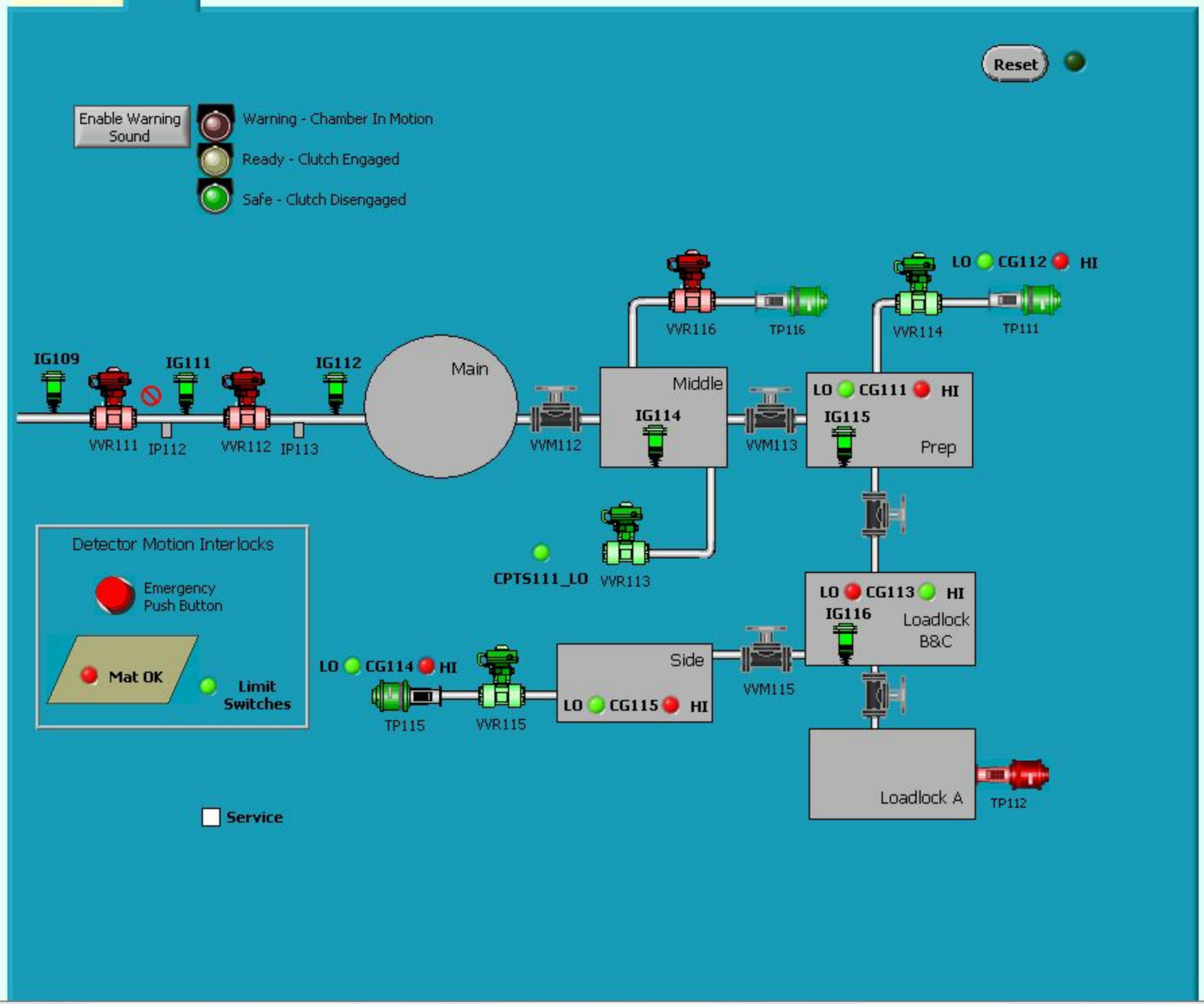

200

EPS-1031 (Control)

Beamline 10.3.1 EPS

Reset

Beamline Overview | Shutter Operation | Instruction

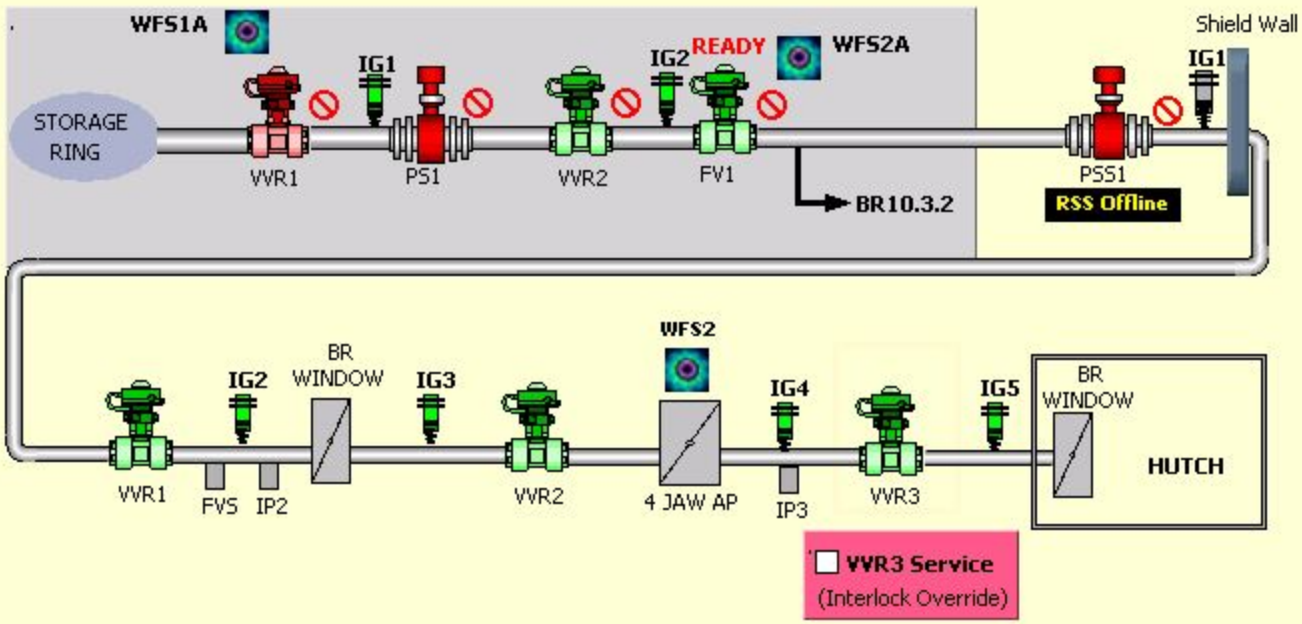

response time
436

EPS-1031 (Control)

Beamline 10.3.1 EPS

Reset

Beamline Overview | Shutter Operation | Instruction

Turn Beam On

Beam On

Turn Beam Off

EPS-1031 (Control)

Beamline 10.3.1 EPS

Reset

Beamline Overview | Shutter Operation | Instruction

BL 10.3.1 EPS (EQUIPMENT PROTECTION SYSTEM)

This beamline has a PC running Labview as the interface to the EPS.

1) If power is lost, reboot and log in as "EPS" with "EPSuser" as the password.

2) If EPS window is not open, click on BR1031_EPS desktop icon

3) The Labview display has 2 tabs at the top for two views:
a) Beamline overview - shows (and controls) the entire beamline
b) Shutter Operation - has simple, big buttons for shutter PSS1 control only

4) Shutter Operation tab:
a) Turn Beam On - requests the shutter open (and also valve VVR1 if it is not yet open).
If shutter opens and beam is delivered to hutch, Beam On light will go green.
b) Turn Beam Off - requests shutter closed, if permissible. Beam On light will go dark if beam is off.

5) Beamline overview tab:
a) Open or close any valve or shutter by clicking on it. A menu will pop up. Green device is "open," red device is "closed".
b) PSS1 and VVR1 are controlled by the front-end EPS. If these are requested open from the branchline but have not (or cannot be) opened from the front-end, READY will be displayed above the device.
c) The universal "not" symbol X (circle with a slash) next to a device means the state of that device is not changeable. Click on the "not" symbol for a description of why the device state cannot be changed.
d) Red beampipe means beam in pipe, gray means no beam.
e) Front-end devices (in large gray-shaded box) are displayed but are not controllable.
f) When storage ring is in FILL mode, flashing SR FILL display appears.

6) Device faults and resets:
a) When any device needs a reset, the reset light at the top of the page blinks.
b) Faulted ion gauges (IG) go red. When IG becomes "ok," IG symbol blinks yellow indicating a need for a reset, using the RESET button at the top right of the screen.
c) Faulted water flow switches (WFS) stop spinning. When the flow is "ok," the symbol starts spinning, but the orange box around flow indicates a need for reset.
d) Valve or shutter fault is indicated by a yellow circle with exclamation point. Faults are either:
1) open/closed sensors shorted or 2) device failed to respond within a set time period.

7) VVR3 Service Mode:
Check the box to enter service mode. There is no pumping downstream of VVR3. Therefore, service mode ignores the ion gauge interlocks both upstream and downstream of this valve and allows opening at will. For safety, VVR1 and VVR2 are forced closed and are not allowed to open until the service mode box is unchecked.

ALS-EPS-BL1032 (Control)

Beamline 10.3.2 Equipment Protection System

Beamline Overview | Shutter Operation

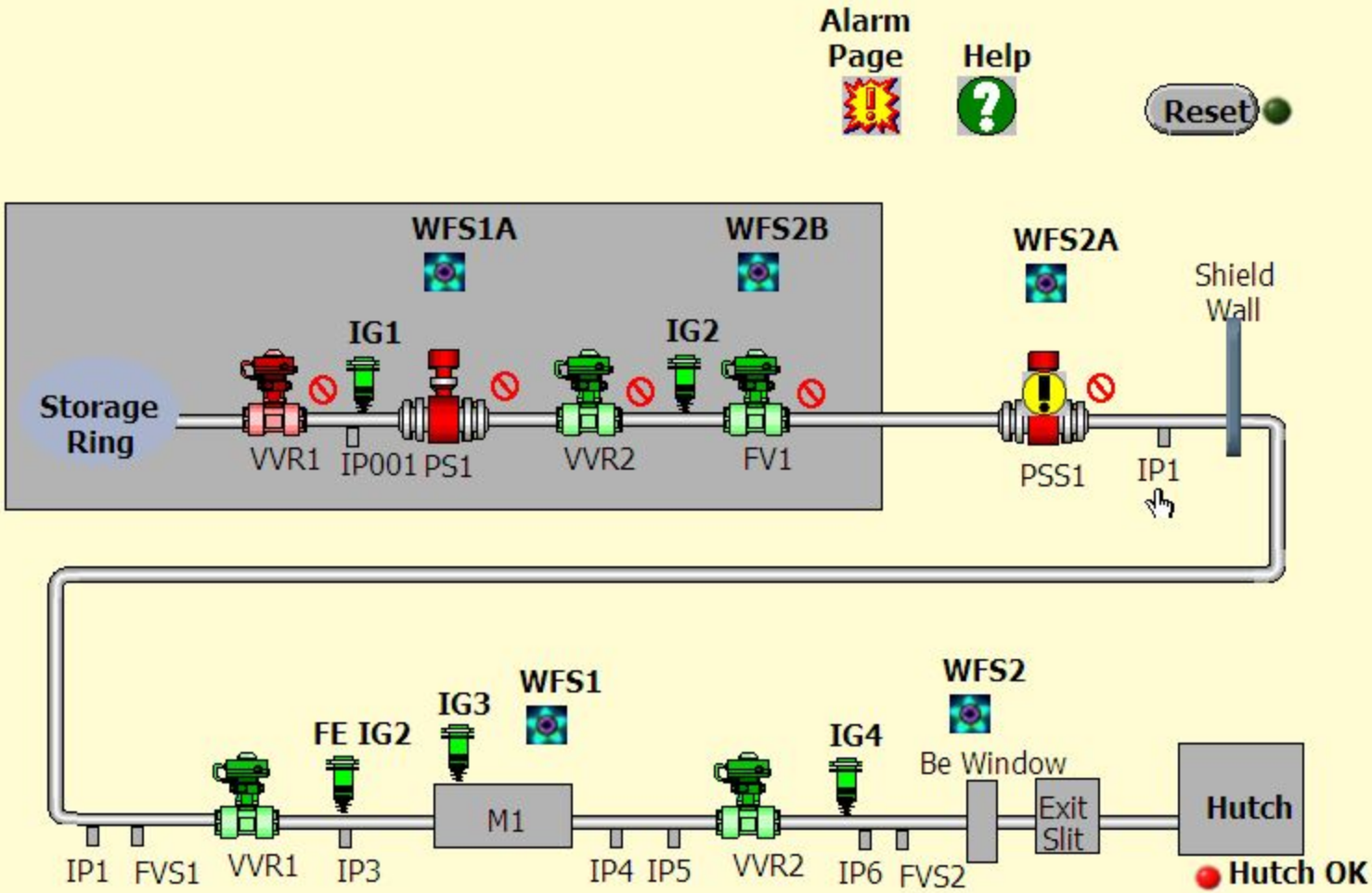

Response Time
385

ALS-EPS-BL1032 (Control)

Beamline 10.3.2 Equipment Protection System

Beamline Overview | Shutter Operation

Turn Beam On

Turn Beam Off

Beam On

Response Time
400

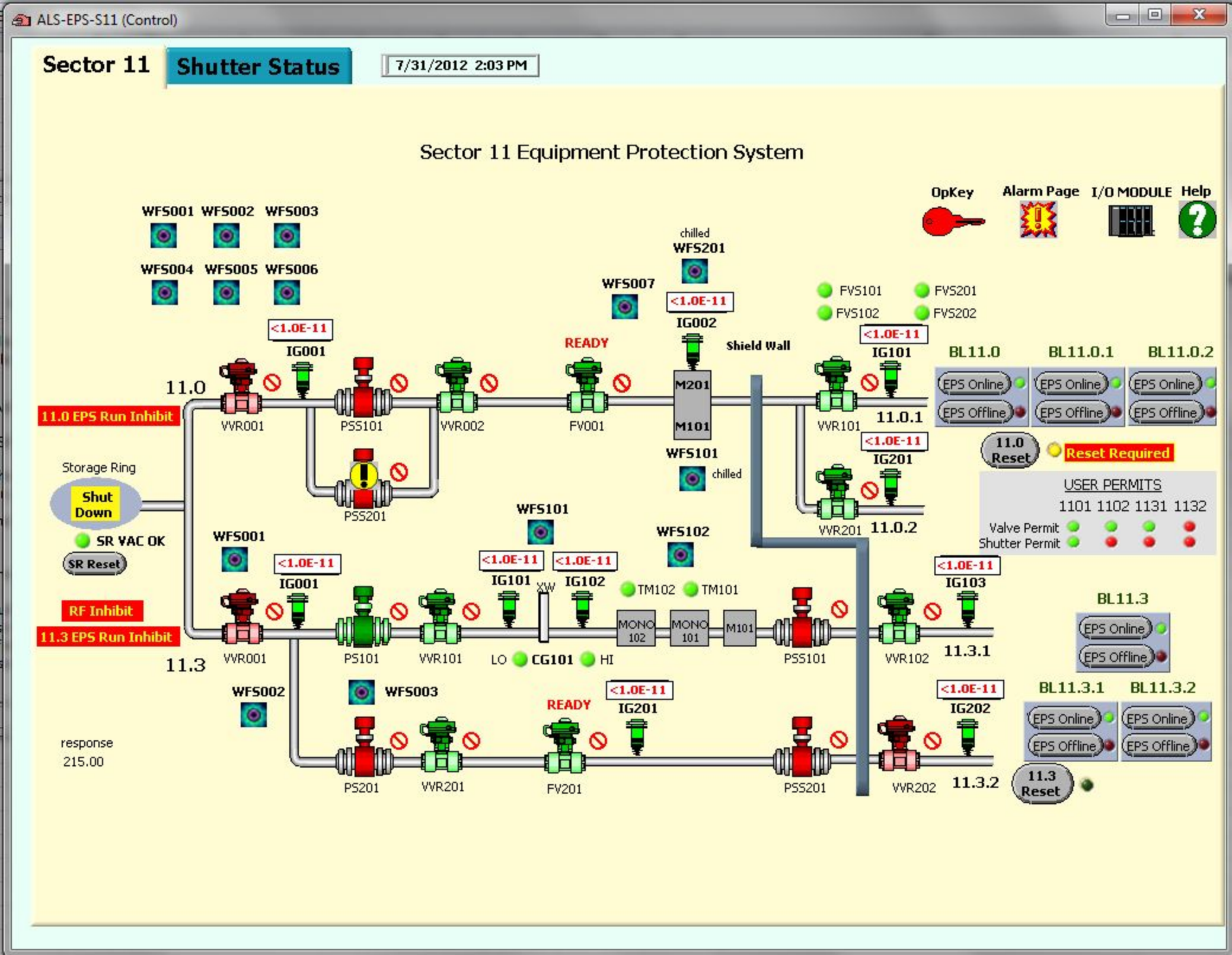
ALS-EPS-S11 (Control)
Sector 11
Shutter Status
7/31/2012 2:03 PM
Sector 11 Equipment Protection System
OpKey
Alarm Page
I/O MODULE
Help
WFS001 WFS002 WFS003
WFS004 WFS005 WFS006
WFS007
chilled
WFS201
<1.0E-11
IG002
FVS101
FVS102
FVS201
FVS202
<1.0E-11
IG001
READY
Shield Wall
<1.0E-11
IG101
BL11.0
BL11.0.1
BL11.0.2
11.0
11.0 EPS Run Inhibit
VVR001
PSS101
VVR002
FV001
M201
M101
VVR101
11.0.1
EPS Online
EPS Offline
WFS101
chilled
<1.0E-11
IG201
11.0 Reset
Reset Required
PSS201
VVR201
11.0.2
USER PERMITS
1101 1102 1131 1132
Valve Permit
Shutter Permit
Storage Ring
Shut Down
SR VAC OK
SR Reset
WFS001
WFS101
WFS102
<1.0E-11
IG001
<1.0E-11
IG101
<1.0E-11
IG102
XW
TM102
TM101
<1.0E-11
IG103
RF Inhibit
11.3 EPS Run Inhibit
11.3
VVR001
PS101
VVR101
LO
CG101
HI
MONO 102
MONO 101
M101
PSS101
VVR102
11.3.1
BL11.3
EPS Online
EPS Offline
WFS002
WFS003
READY
<1.0E-11
IG201
<1.0E-11
IG202
BL11.3.1
BL11.3.2
response
215.00
PS201
VVR201
FV201
PSS201
VVR202
11.3.2
11.3 Reset

ALS-EPS-S11 (Control)

Sector 11 **Shutter Status** 7/31/2012 2:03 PM

Warning - This display must not be used for any radiation safety-related decisions. For such decisions, look directly at the RSS (personnel safety shutter) chassis indicator lights. Failure to follow this practice could lead to a safety incident!

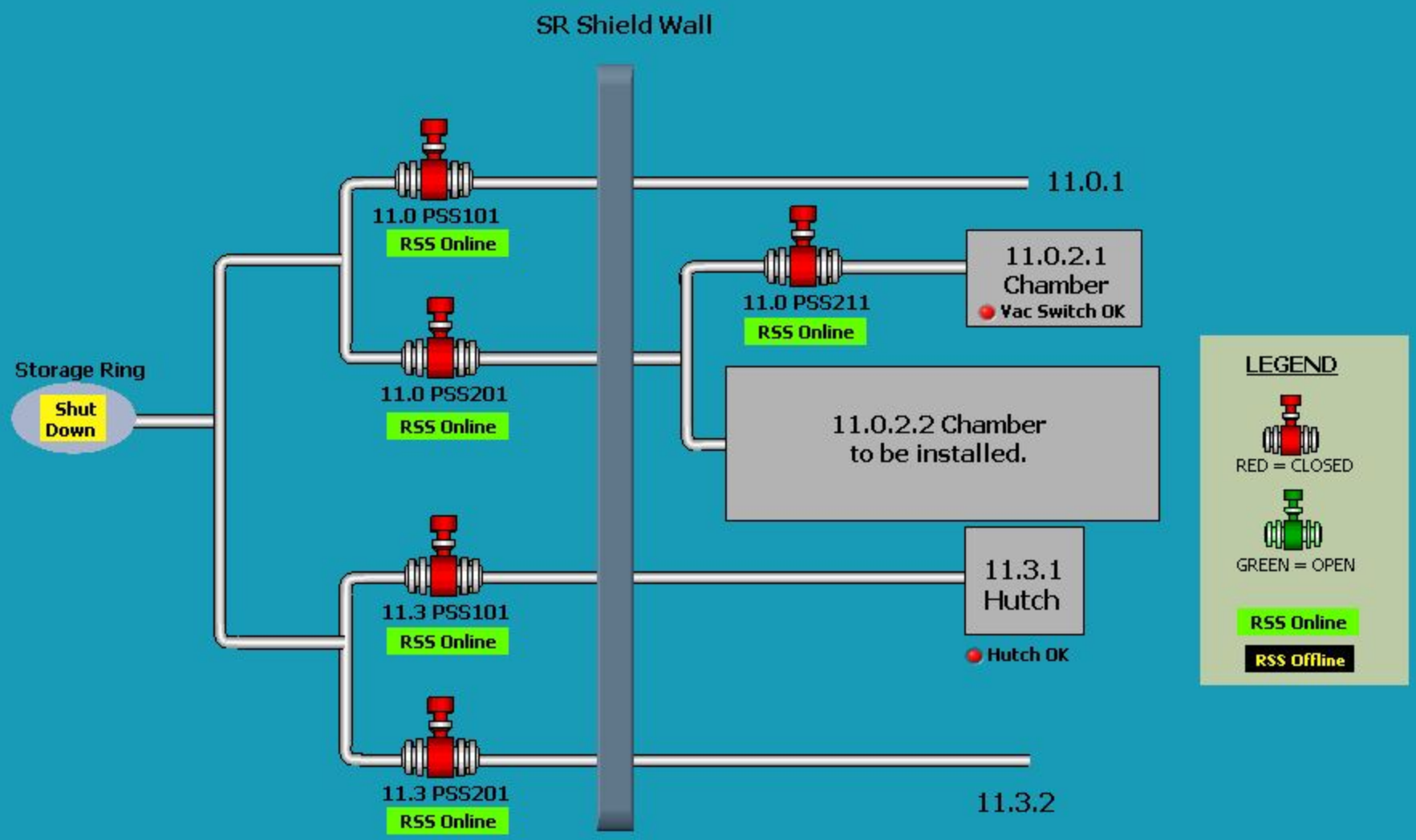

ALS-EPS-BL1101 (Control)

BL1101 | ES1 | ES2

Beamline 11.0.1 Equipment Protection System

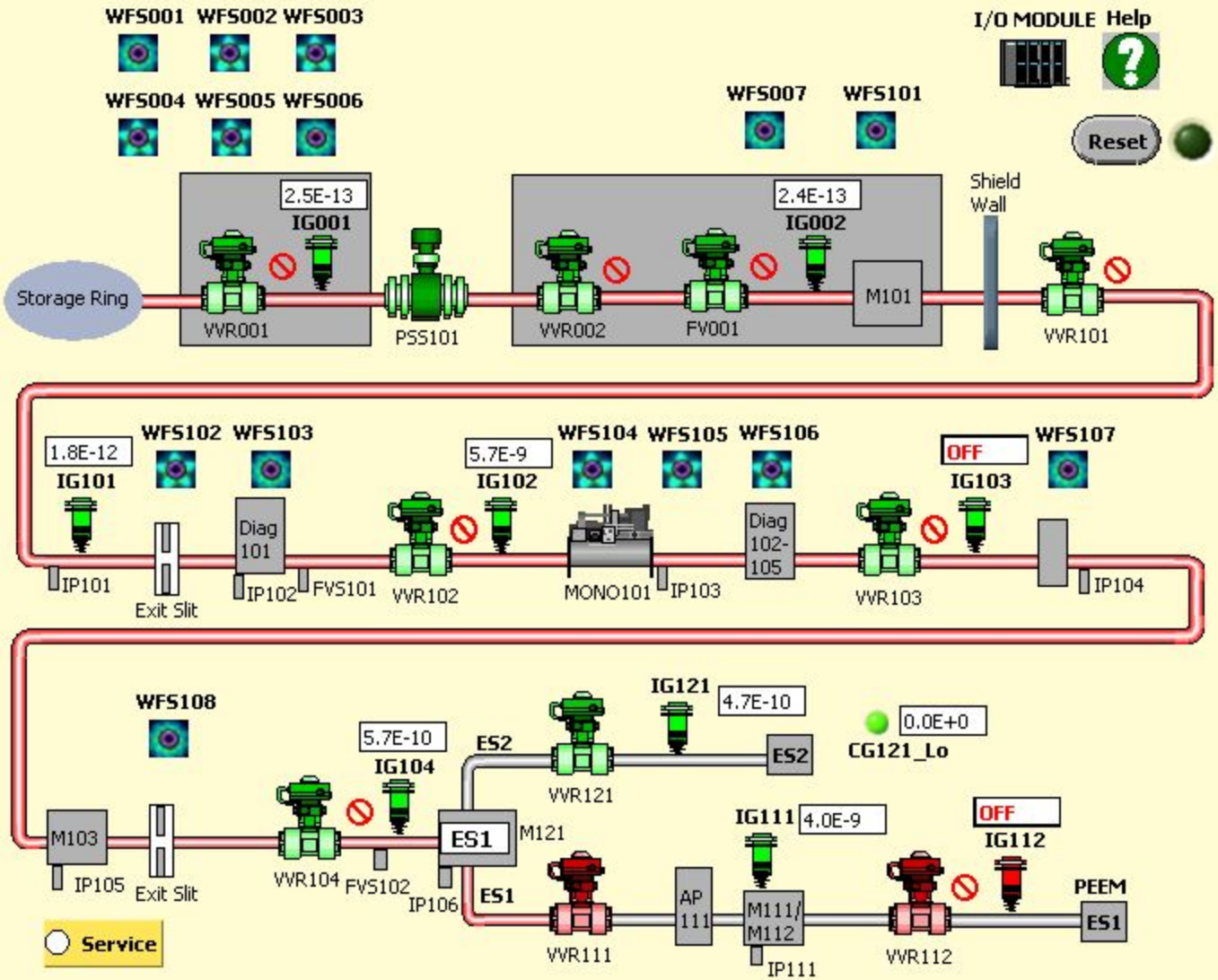

499

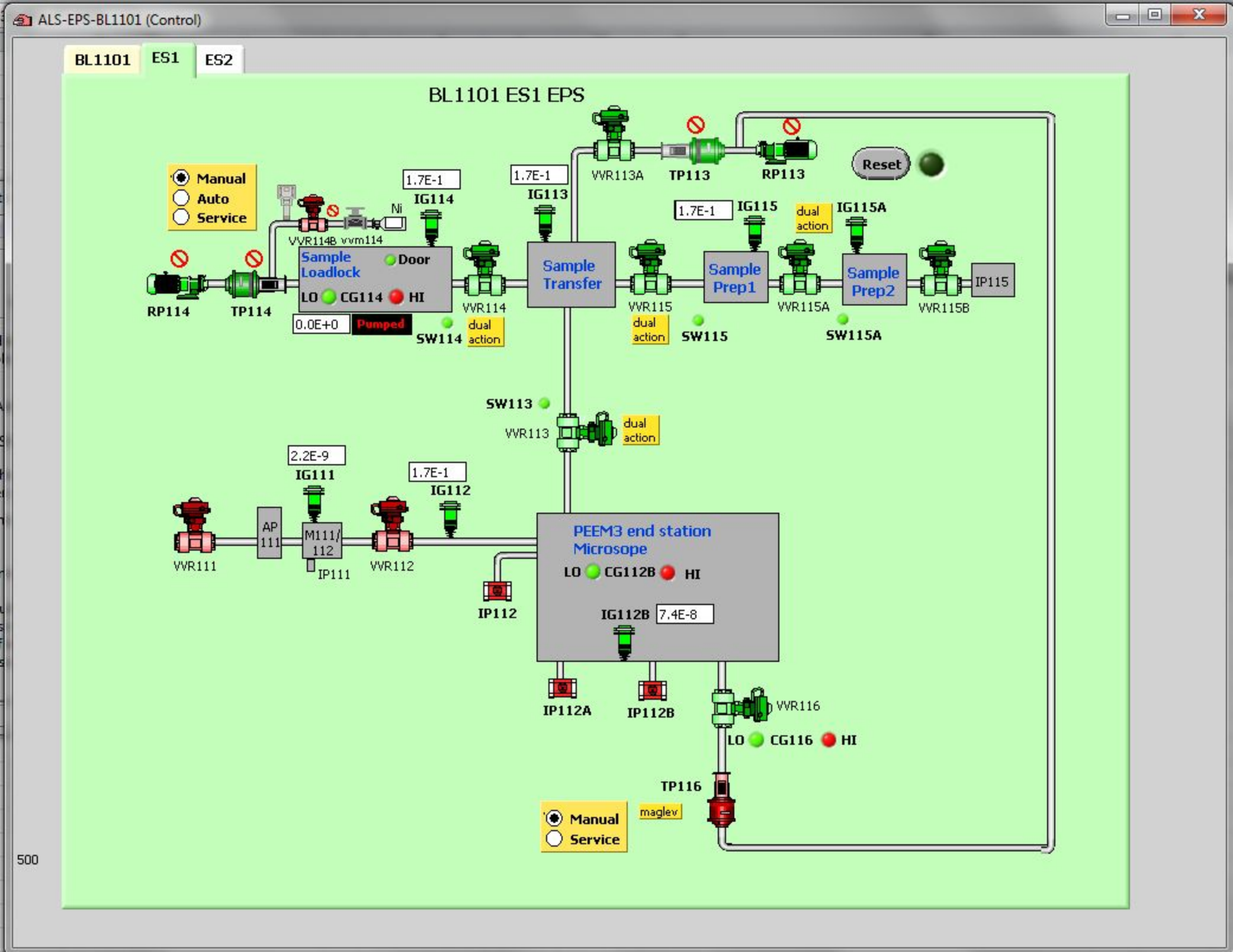
ALS-EPS-BL1101 (Control)
BL1101
ES1
ES2
BL1101 ES1 EPS
Manual
Auto
Service
Reset
VVR113A
TP113
RP113
1.7E-1
IG114
1.7E-1
IG113
1.7E-1
IG115
dual action
IG115A
Ni
VVR114B
vvm114
Sample Loadlock
Door
LO
CG114
HI
0.0E+0
Pumped
RP114
TP114
VVR114
SW114
dual action
Sample Transfer
VVR115
dual action
SW115
Sample Prep1
VVR115A
Sample Prep2
SW115A
VVR115B
IP115
SW113
VVR113
dual action
2.2E-9
IG111
1.7E-1
IG112
AP 111
M111/ 112
IP111
VVR111
VVR112
IP112
PEEM3 end station
Microsope
LO
CG112B
HI
IG112B
7.4E-8
IP112A
IP112B
VVR116
LO
CG116
HI
TP116
maglev
Manual
Service
500

ALS-EPS-BL1101 (Control)

BL1101 | ES1 | ES2

BL1101 ES2 EPS

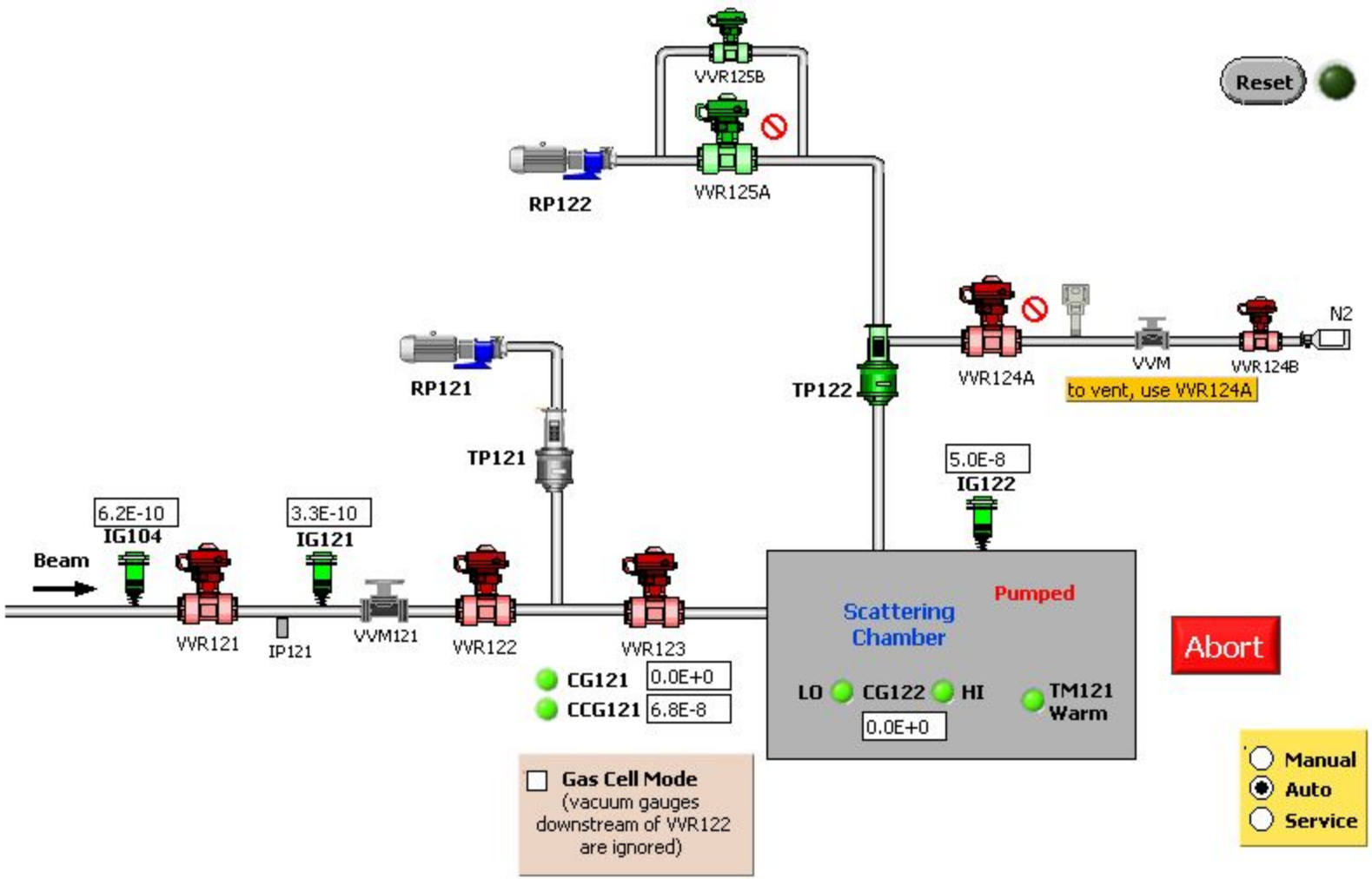

2

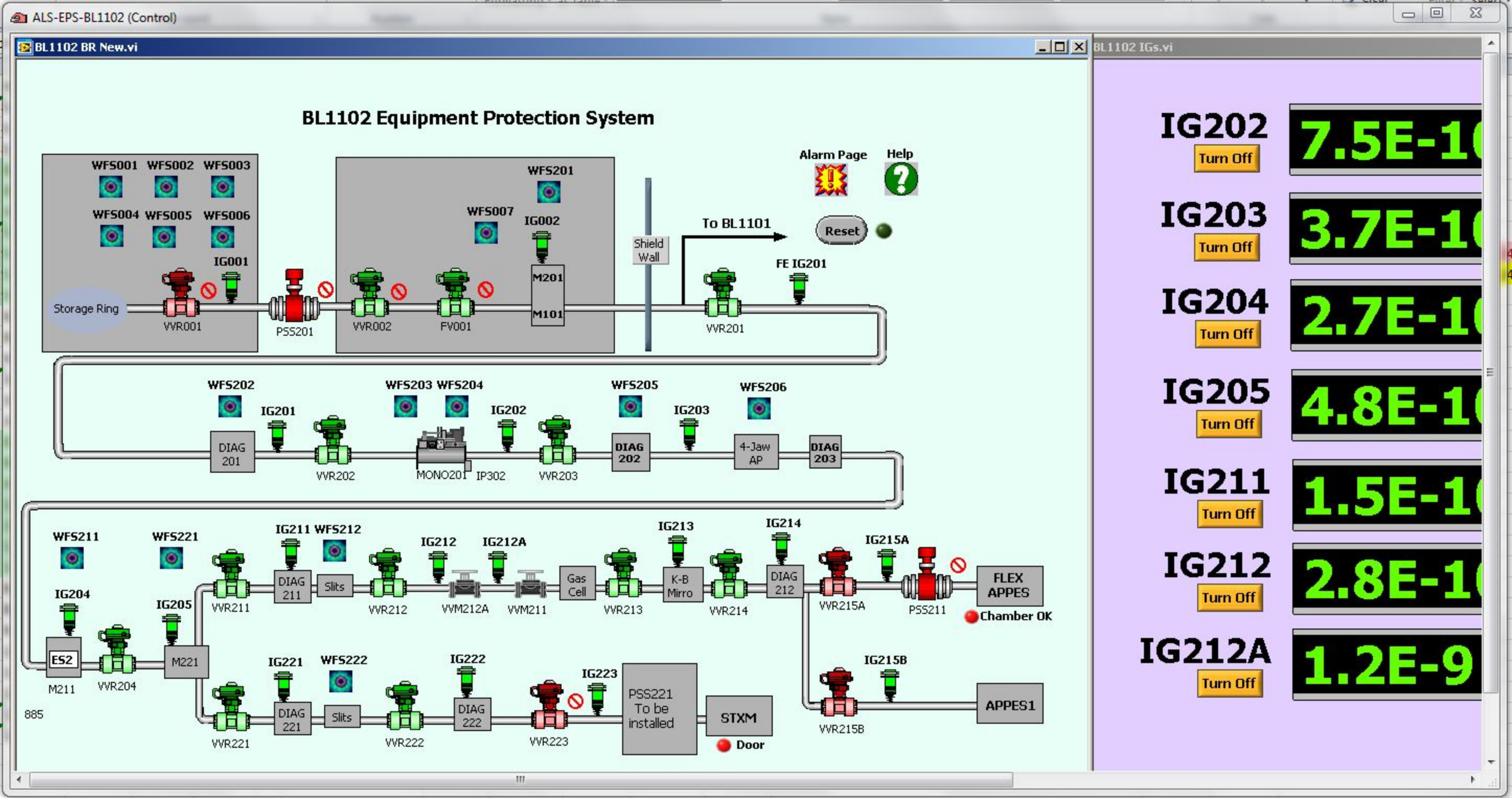
ALS-EPS-BL1102 (Control)
BL1102 BR New.vi
BL1102 Equipment Protection System
WFS001 WFS002 WFS003
WFS004 WFS005 WFS006
IG001
Storage Ring
VVR001
PSS201
WFS201
WFS007
IG002
M201
M101
VVR002
FV001
Shield Wall
To BL1101
Alarm Page
Help
Reset
FE IG201
VVR201
WFS202
IG201
DIAG 201
VVR202
WFS203 WFS204
MONO201
IP302
IG202
VVR203
WFS205
DIAG 202
IG203
WFS206
4-Jaw AP
DIAG 203
WFS211
WFS221
IG204
ES2
M211
VVR204
IG205
M221
IG211 WFS212
VVR211
DIAG 211
Slits
IG212
IG212A
VVR212
VVM212A
VVM211
Gas Cell
VVR213
IG213
K-B Mirro
VVR214
IG214
DIAG 212
IG215A
VVR215A
PSS211
FLEX APPES
Chamber OK
IG221
WFS222
VVR221
DIAG 221
Slits
IG222
VVR222
DIAG 222
IG223
VVR223
PSS221 To be installed
STXM
Door
IG215B
VVR215B
APPES1
885
BL1102 IGs.vi
IG202
Turn Off
7.5E-1
IG203
Turn Off
3.7E-1
IG204
Turn Off
2.7E-1
IG205
Turn Off
4.8E-1
IG211
Turn Off
1.5E-1
IG212
Turn Off
2.8E-1
IG212A
Turn Off
1.2E-9

ALS-EPS-BL1132 (Control)

BL11.3.2 ES_ADC_Sharp

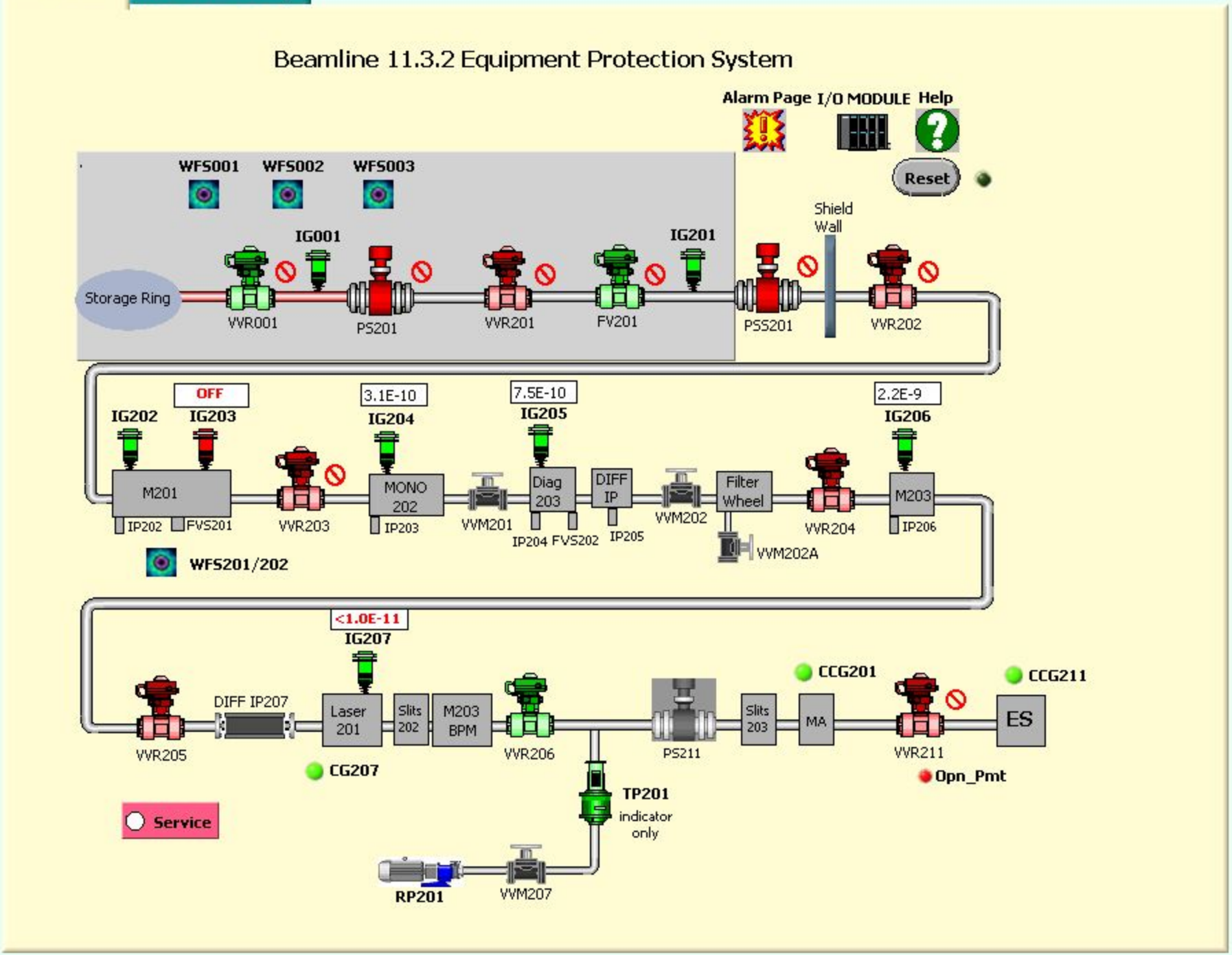

ALS-EPS-BL1132 (Control)

BL1132.vi

BL11.3.2 ES_CXRO_Sharp

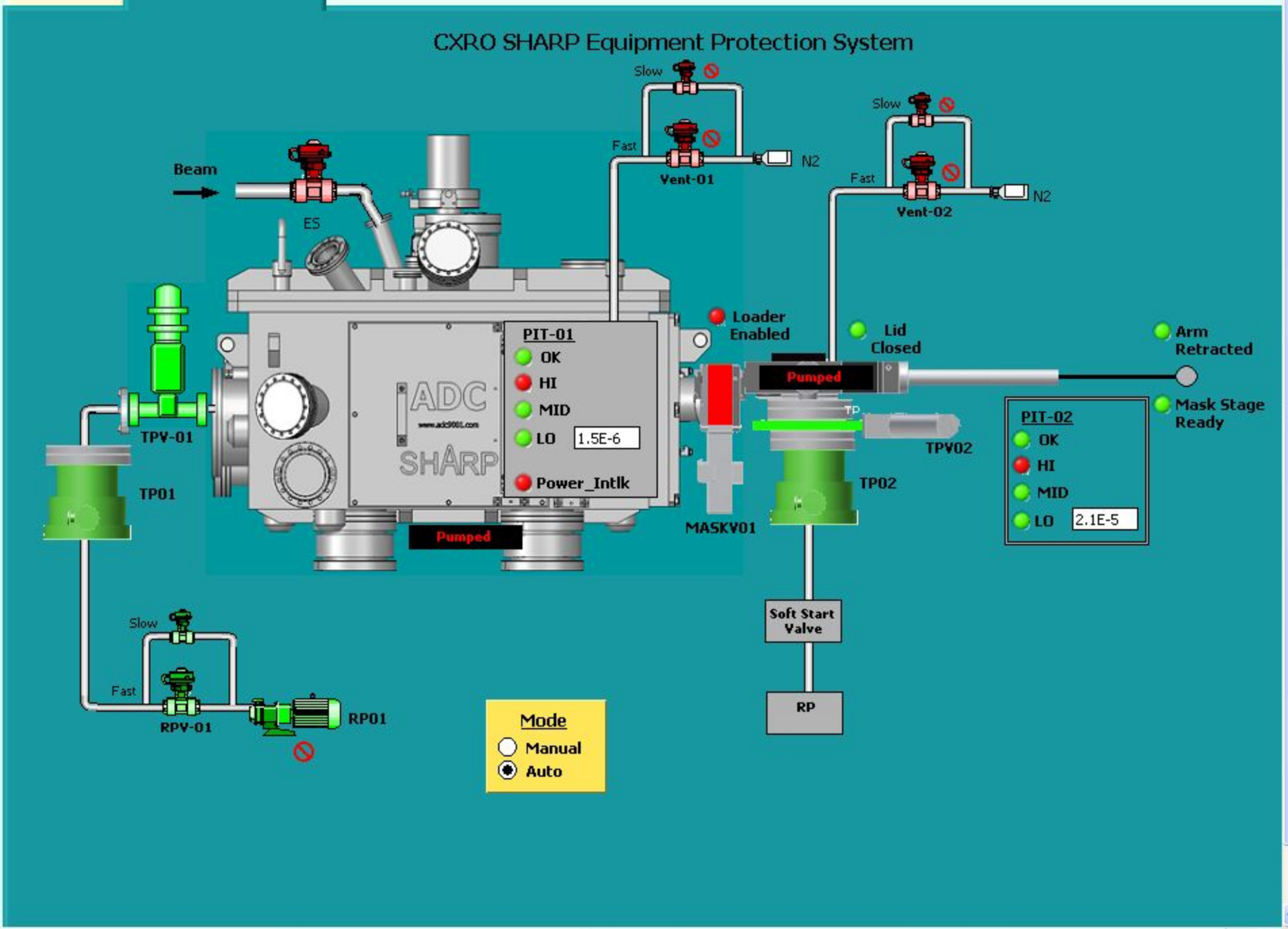

2219.0

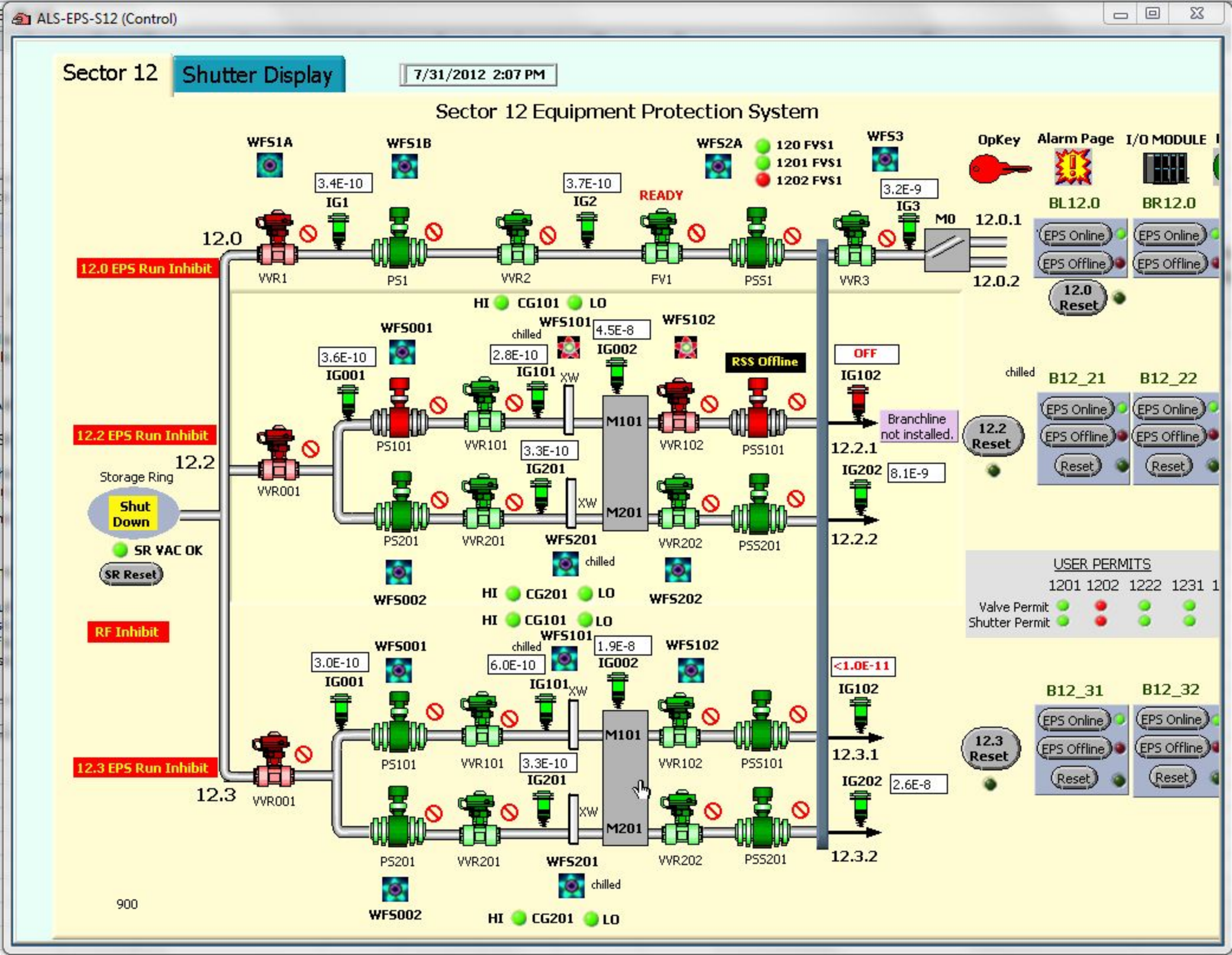
ALS-EPS-S12 (Control)
Sector 12
Shutter Display
7/31/2012 2:07 PM
Sector 12 Equipment Protection System
WFS1A
WFS1B
WFS2A
WFS3
120 FVS1
1201 FVS1
1202 FVS1
OpKey
Alarm Page
I/O MODULE
3.4E-10
IG1
3.7E-10
IG2
READY
3.2E-9
IG3
M0
12.0.1
12.0.2
BL12.0
BR12.0
EPS Online
EPS Offline
12.0 Reset
12.0
12.0 EPS Run Inhibit
VVR1
PS1
VVR2
FV1
PSS1
VVR3
HI CG101 LO
WFS001
WFS101
chilled
4.5E-8
WFS102
3.6E-10
IG001
2.8E-10
IG101
XW
IG002
RSS Offline
OFF
IG102
chilled
B12_21
B12_22
12.2 EPS Run Inhibit
12.2
Storage Ring
Shut Down
SR VAC OK
SR Reset
VVR001
PS101
VVR101
M101
VVR102
PSS101
Branchline not installed.
12.2 Reset
12.2.1
3.3E-10
IG201
IG202
8.1E-9
PS201
VVR201
WFS201
M201
VVR202
PSS201
12.2.2
WFS002
HI CG201 LO
WFS202
USER PERMITS
1201 1202 1222 1231
Valve Permit
Shutter Permit
RF Inhibit
HI CG101 LO
WFS101
chilled
1.9E-8
WFS102
3.0E-10
IG001
6.0E-10
IG101
XW
IG002
<1.0E-11
IG102
B12_31
B12_32
12.3 EPS Run Inhibit
12.3
VVR001
PS101
VVR101
M101
VVR102
PSS101
12.3.1
12.3 Reset
3.3E-10
IG201
IG202
2.6E-8
PS201
VVR201
WFS201
M201
VVR202
PSS201
12.3.2
WFS002
HI CG201 LO
900

ALS-EPS-S12 (Control)

Sector 12 | Shutter Display | 7/31/2012 2:07 PM

Warning - This display must not be used for any radiation safety-related decisions. For such decisions, look directly at the RSS (personnel safety shutter) chassis indicator lights. Failure to follow this practice could lead to a safety incident!

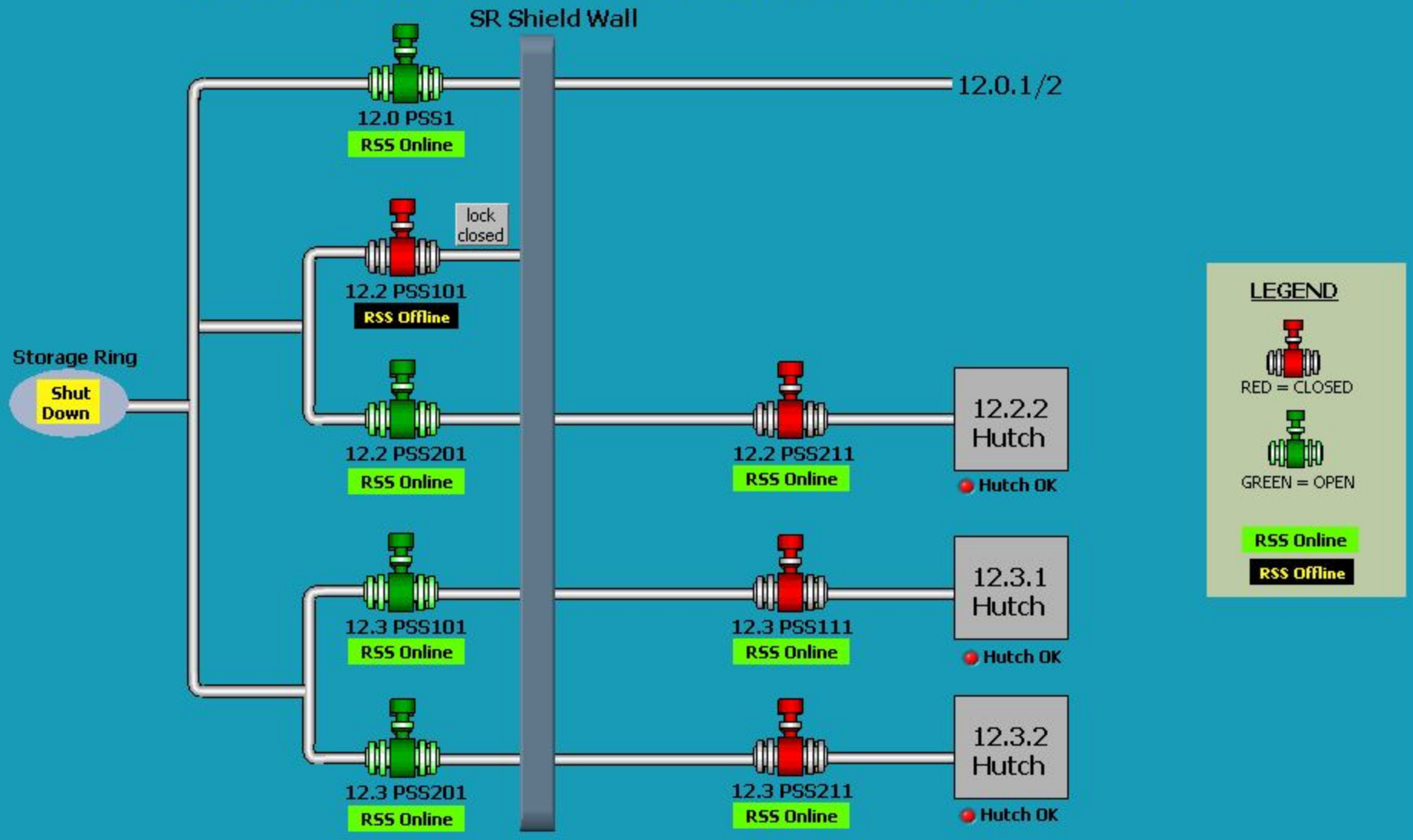

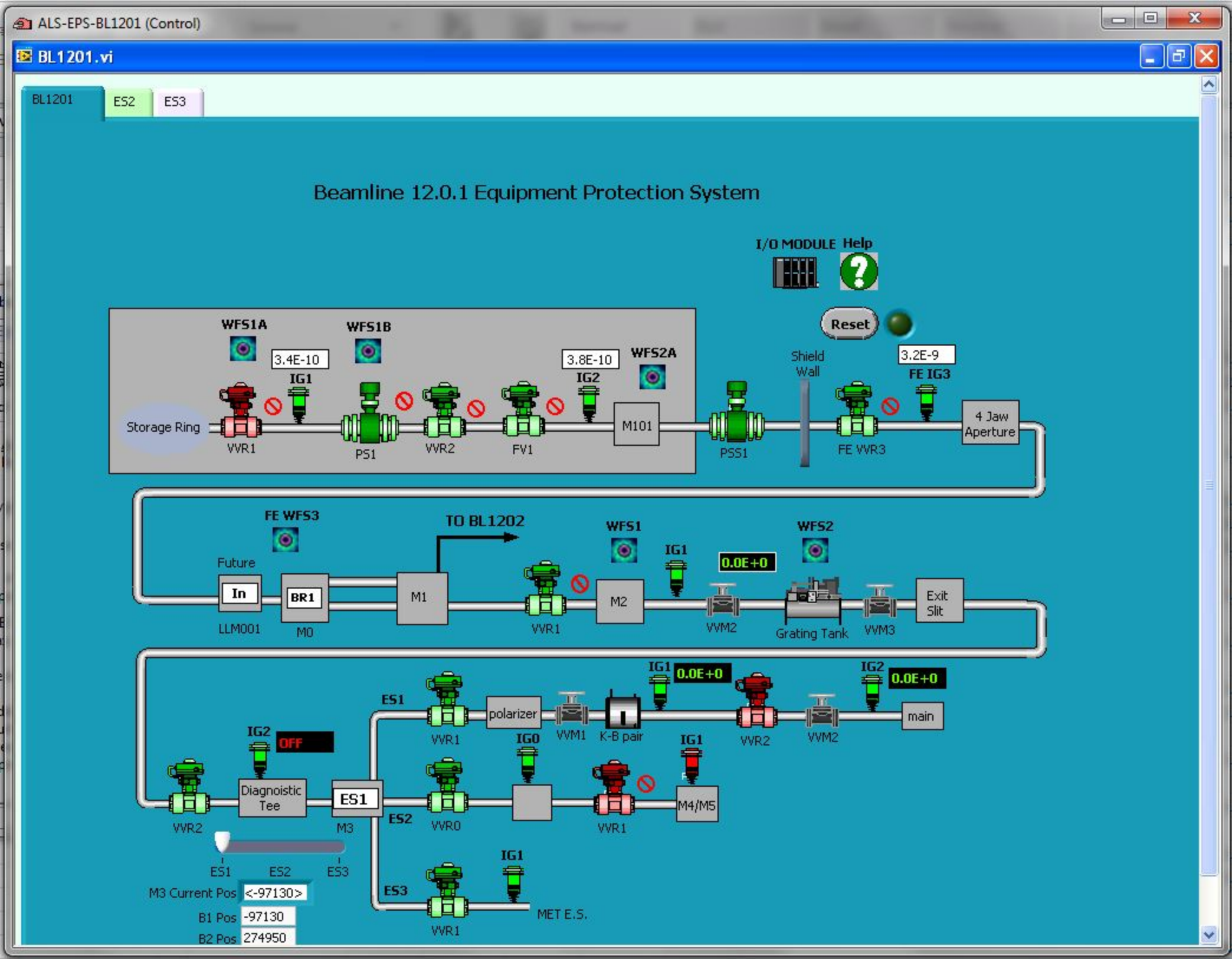
ALS-EPS-BL1201 (Control)
BL1201.vi
BL1201
ES2
ES3
Beamline 12.0.1 Equipment Protection System
I/O MODULE
Help
Reset
WFS1A
WFS1B
WFS2A
3.4E-10
3.8E-10
3.2E-9
IG1
IG2
FE IG3
Shield Wall
Storage Ring
VVR1
PS1
VVR2
FV1
M101
PSS1
FE VVR3
4 Jaw Aperture
FE WFS3
TO BL1202
Future
In
LLM001
BR1
M0
M1
VVR1
WFS1
M2
IG1
0.0E+0
VVM2
WFS2
Grating Tank
VVM3
Exit Slit
IG1
0.0E+0
IG2
0.0E+0
ES1
polarizer
VVR1
VVM1
K-B pair
VVR2
VVM2
main
IG2
OFF
Diagnoistic Tee
VVR2
ES1
M3
IG0
VVR0
IG1
VVR1
M4/M5
ES2
ES1
ES2
ES3
M3 Current Pos
<-97130>
B1 Pos
-97130
B2 Pos
274950
IG1
ES3
VVR1
MET E.S.

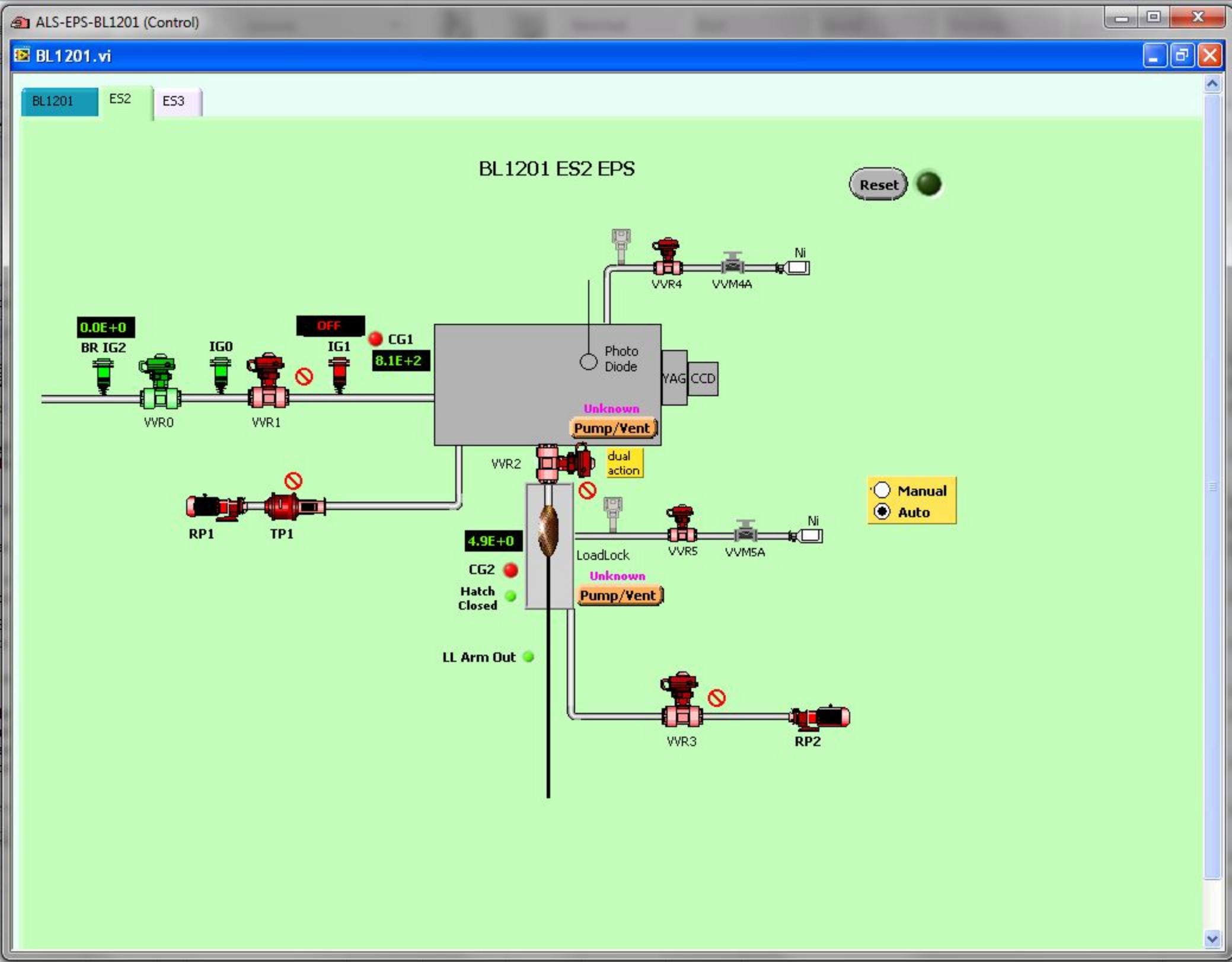
ALS-EPS-BL1201 (Control)
BL1201.vi
BL1201
ES2
ES3
BL1201 ES2 EPS
Reset
Ni
VVR4
VVM4A
0.0E+0
BR IG2
IG0
OFF
IG1
CG1
8.1E+2
Photo
Diode
YAG
CCD
Unknown
Pump/Vent
VVR0
VVR1
VVR2
dual
action
Manual
Auto
RP1
TP1
4.9E+0
CG2
Hatch
Closed
LoadLock
VVR5
VVM5A
Ni
Unknown
Pump/Vent
LL Arm Out
VVR3
RP2

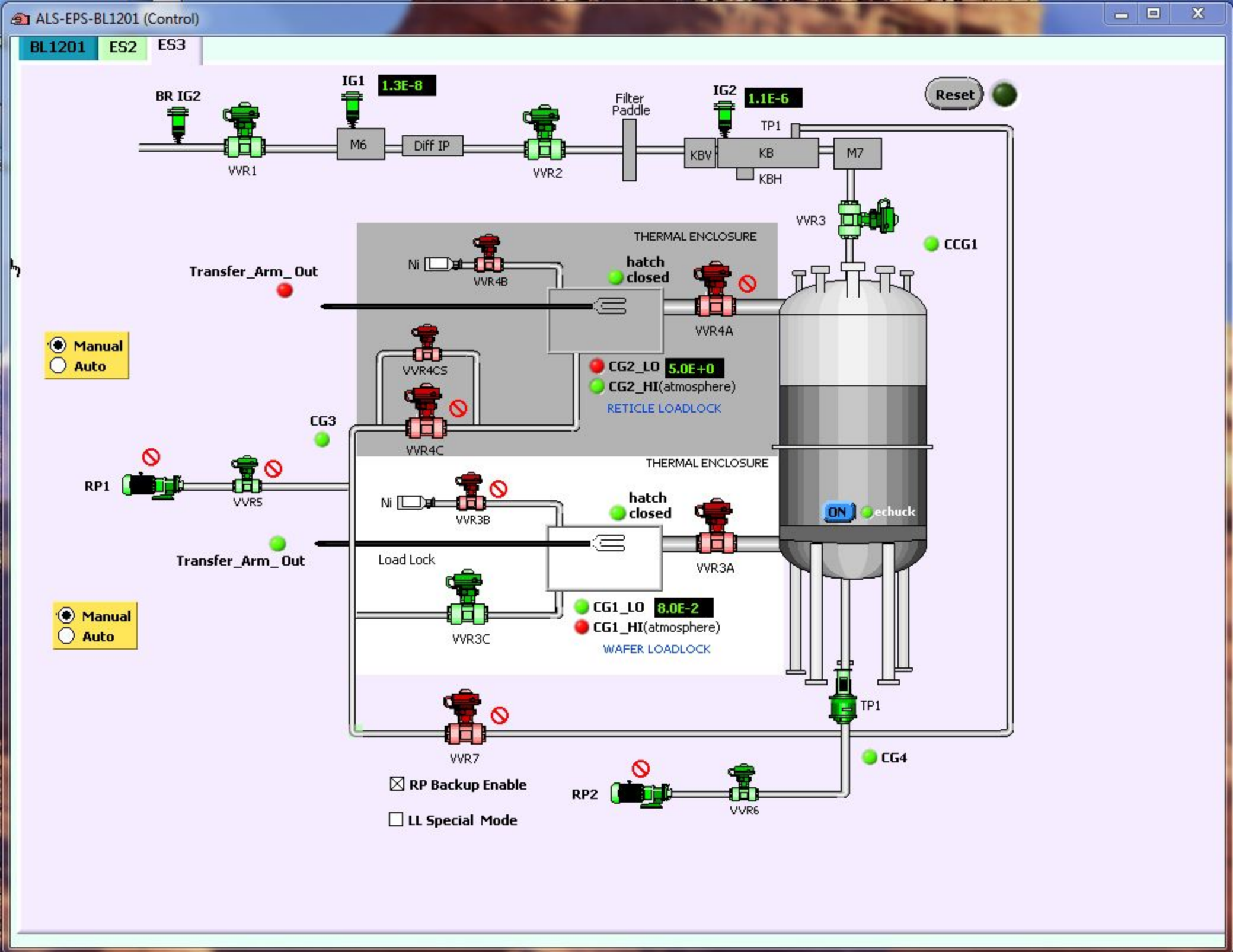
ALS-EPS-BL1201 (Control)
BL1201
ES2
ES3
BR IG2
VVR1
IG1
1.3E-8
M6
Diff IP
VVR2
Filter Paddle
IG2
1.1E-6
TP1
KBV
KB
KBH
M7
Reset
VVR3
CCG1
THERMAL ENCLOSURE
Ni
VVR4B
hatch closed
VVR4A
Transfer_Arm_ Out
Manual
Auto
VVR4CS
CG2_LO
5.0E+0
CG2_HI(atmosphere)
RETICLE LOADLOCK
CG3
VVR4C
RP1
VVR5
THERMAL ENCLOSURE
Ni
VVR3B
hatch closed
VVR3A
ON
echuck
Transfer_Arm_ Out
Load Lock
Manual
Auto
VVR3C
CG1_LO
8.0E-2
CG1_HI(atmosphere)
WAFER LOADLOCK
TP1
VVR7
CG4
RP Backup Enable
RP2
VVR6
LL Special Mode

ALS-EPS-BL1223 (Control)

BL1202 | BL122_BL123

BL1202 | ES2 | Instruction

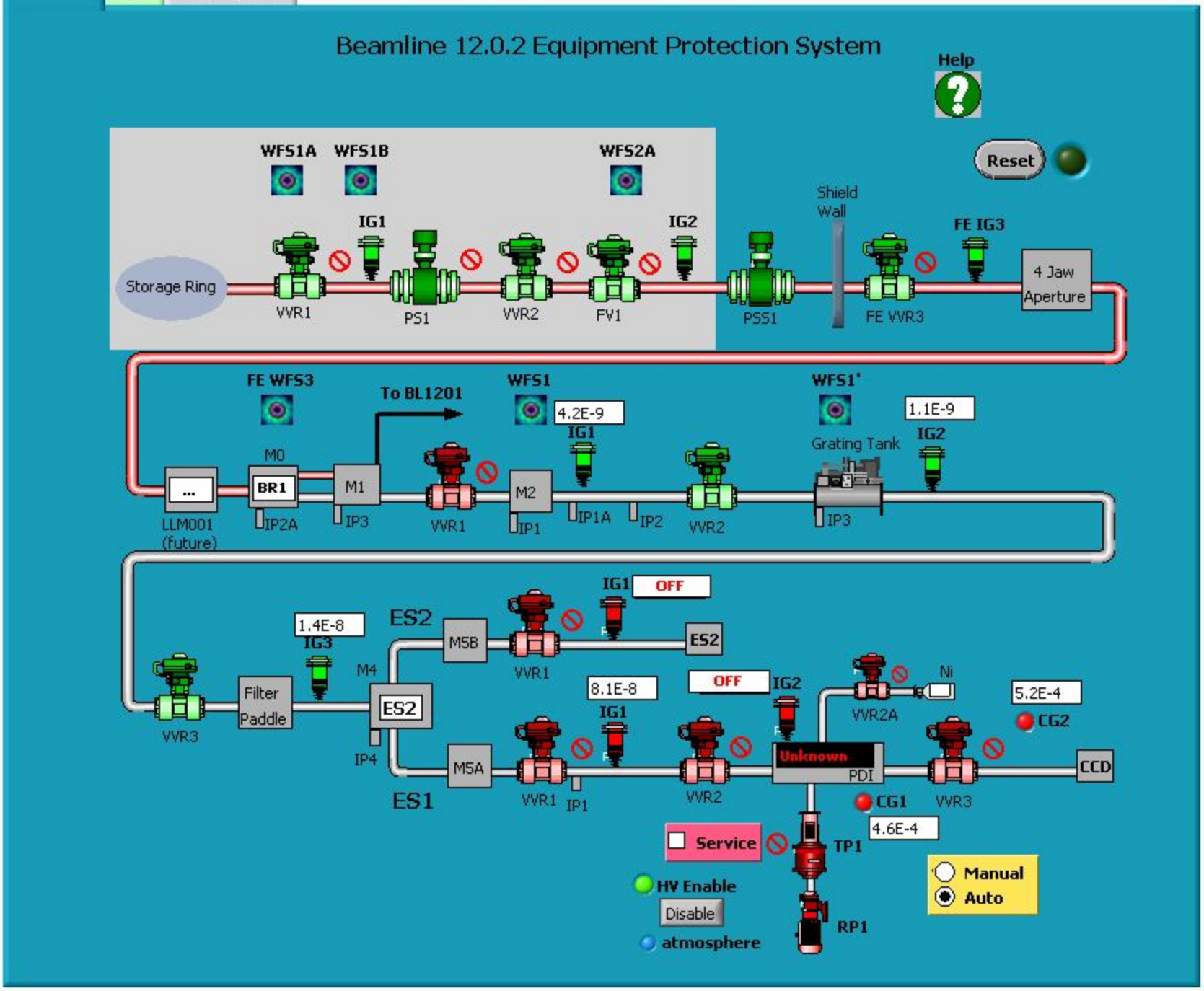

457

ALS-EPS-BL1223 (Control)

BL1202 | BL122_BL123

BL1202 | ES2 | Instruction

BL1202 ES2 EPS

Manual
Auto
Service

Reset

Ni
VVR1D
atmosphere
dual action
Door
Xfer_Arm_Out
VVR1C
CG2
1.1E+3
VVR1E
Manual
fault
TP2
RP2
Ni
VVR1H
RP3
RP4
TP1
RP1
IG3
VVR1B
IG1
OFF
1.1E+3
CG1
diff pumped seals
MAIN CHAMBER
CCD
VVM2
ES2_VVR1
HV Enable
Enable
VVR1A
Caution! In Service Mode, all interlocks are overridden. Operate at your own risk!
atmosphere
Ni
VVR1F
VVM1
VVR1G
IP1

585

ALS-EPS-BL1223 (Control)

BL1202 | BL122_BL123

BL1202 | ES2 | Instruction

This endstation has 2 chambers-the loadlock and the main chamber. Each chamber has its own set of turbo pump and roughing pump.

VVR1C acts like a bridge between the two chambers. VVR1C has to be closed while the two chambers are being pumped or vented. Only when both chambers are pumped can VVR1C be opened.

VVR1 can be opened when the endstation is not in service mode and VVR1C is closed. It also requires the vacuum at both sides (BR_IG3 and ES2_IG1) to be good.

VVR1A can be opened when IP1 is on and IG1 is good. Otherwise it can only be opened when the endstation is in service mode. Once VVR1A is open, IP1 turning off doesn't interlock it any more. It only closes when IG1 faults.

If VVR1B is initially closed, it can be opened either:
1. when pumps (RP1 and TP1) are on and CG1 is good (main chamber pumped), or
2. when pumps are off and CG1 is bad (main chamber vented). VVR1B will stay open during the pumping session. Once condition 1 is established, a pump or CG fault will close VVR1B.

VVR1E is acting as a manual valve. Right now the open command for VVR1E in the PLC logic is bypassed true.

Pumping
The two chambers have to be pumped separately with VVR1C closed.
In manual mode, the turbo pump won't start until the roughing pumps have started for at least 5 seconds.

Venting
The two chambers have to be vented separately with VVR1C closed.
To vent the loadlock, the user must remember to turn on manual valve which connects the nitrogen to VVR1D.
This valve should only be opened a little bit so the venting process occurs more slowly (to protect the turbo pumps.)
When they are done venting, they should remember to close this manual valve to save nitrogen (because the pressure relief valve is going to release nitrogen into the air indefinitely.)

To vent the main chamber, The user should remember to turn off IG1 first (the EPS will prompt for this).
An open request on VVR1F will open VVR1G first. After purging the line with nitrogen for 5 seconds, VVR1F will open.

Auto Mode
When user switches from manual state into auto state, the texts on the two chambers show "Unknown" even if the chambers are pumped or vented. This is because the system doesn't really know what the user intents to do. Before proceeding, the user should issue a pump or vent request.
In auto mode, the user issues pump or vent request from the menu on the two chambers and the pump or vent operation is handled by the system automatically. Remember the user does not have control over individual pumps or valves besides VVR1, VVR1A, and VVR1C in this mode.

Service Mode
In "Service mode", all the interlocks are overridden, so the user should procceed with caution.
In particular, they should remember to start the turbo pump at least 5 seconds after the roughing pumps have started.

ALS-EPS-BL1223 (Control)

BL1202 | BL122_BL123

Help

BR12.2.2 | BR12.3.1 | BR12.3.2

Beamline 12.2.2 Equipment Protection System

Reset

Alarm Page

Storage Ring

VVR001

IG001

WFS001

PS101

VVR101

LO CG101 HI

IG101

WFS101

IG002

WFS102

M101

Shield Wall

12.2.1

WFS201

IG201

PS201

VVR201

LO CG201 HI

M201

WFS002

WFS202

VVR202

PSS201

12.2.2

IG202

VVR203

WFS203

AP 201

6.0E-8

IG203

2 Crystal MONO 201

WFS204

Diag Tee

BPM 201

VVR204

3.9E-7

IG204

M202

PSS211

End Station

PRSW211

response time
600

ALS-EPS-BL1223 (Control)

BL1202 | BL122_BL123

BR12.2.2 | BR12.3.1 | BR12.3.2

Help

Beamline 12.3.1 Equipment Protection System

Reset

Alarm Page

WFS001

LO CG101 HI

WFS101

IG002

WFS102

IG001

IG101

M101

12.3.1

PS101

VVR101

VVR102

PSS101

Storage Ring

VVR001

WFS201

IG201

12.3.2

M201

PS201

VVR201

LO CG201 HI

WFS002

5.8E-8

chilled

7.3E-8

WFS103

IG103

WFS104

IG104

IG102

12.3.1

AP 201

2 Crystal MONO 201

Diag Tee

BPM 201

M202

End Station

VVR103

VVR104

PSS111

PRSW111

response time
600

ALS-EPS-BL1223 (Control)

BL1202 | BL122_BL123

Help

BR12.2.2 | BR12.3.1 | BR12.3.2

Beamline 12.3.2 Equipment Protection System

Reset

Alarm Page

WFS001

LO CG101 HI

WFS101

IG002

WFS102

IG001

IG101

Shield Wall

M101

12.3.1

PS101

VVR101

Storage Ring

VVR001

WFS201

IG201

12.3.2

M201

PS201

VVR201

VVR202

PSS201

LO CG201 HI

WFS002

IG202

chilled

WFS203

WFS204

PSS211

PRSW211

response time
400